1855 Data Drive, Suite 150
Hoover, Alabama 35244
T: 205-983-6000 F: 205-983-6001
www.ahoarch.com

AHO ARCHITECTS, A
SOLE PROPRIETORSHIP

ARCHITECT'S SUPPLEMENTAL INSTRUCTIONS

ASI NUMBER: **1**

PROJECT NUMBER: 24029

PROJECT: Express Oil Change & Tire Engineers
Single Building / Right Hand Oil Change / Front Enter / Side Tire Storage
Morehead, Kentucky

DATE OF ISSUANCE: 12/09/2024

DESCRIPTION: **Revisions to Construction Documents**

1. Replace sheet A102 Foundation Details with revised sheet A102, dated 11/27/2024. The sheet was revised to update details 1/A102, 2/A102 and 4/A102 to match the structural drawings.

2. Replace sheet S1.1 Foundation Plan with revised sheet S1.1, dated 11/08/2024. The foundation plan was updated.

3. Replace sheet S3.1 Roof Framing Plan with revised sheet S3.1, dated 11/08/2024. The roof framing plan was updated to adjust the roof joist placement for the roof hatch and the roof deck special fastening area was modified.

4. Replace Sheet S5.1 Sections and Details with revised sheet S5.1, dated 11/08/2024. Section Detail 7 was updated.

COPIES TO: Express Oil Change & Tire Engineers

SIGNED: Marie C. Brunson

Marie C. Brunson
Project Coordinator

1855 Data Drive, Suite 150
Hoover, Alabama 35244
T: 205-983-6000 F: 205-983-6001
www.ahoarch.com

AHO ARCHITECTS, A
SOLE PROPRIETORSHIP

ARCHITECT'S SUPPLEMENTAL INSTRUCTIONS

ASI NUMBER: **2**

PROJECT NUMBER: 24029

PROJECT: Express Oil Change & Tire Engineers
Single Building / Right Hand Oil Change / Front Enter / Side Tire Storage
Morehead, Kentucky

DATE OF ISSUANCE: 12/19/2024

DESCRIPTION: **Revisions to Construction Documents**

1. Replace Sheet A200 Exterior Elevation – Front North with sheet A200 dated 12/19/24. The drawing was updated for the added mechanical louver on the North Elevation.

2. Replace sheet M1.01 Mechanical Floor Plan with sheet M1.01 dated 12/19/2024. The drawing was updated for the added mechanical louver on the North Elevation.

COPIES TO: Express Oil Change & Tire Engineers

SIGNED: Annakate Simmons

Anna Kate Simmons
Intern Interior Designer

EXPRESS OIL CHANGE & TIRE ENGINEERS

SINGLE BUILDING / RIGHT HAND OIL CHANGE / FRONT ENTER / SIDE TIRE STORAGE

2230 FLEMINGSBURG ROAD
MOREHEAD, KENTUCKY 40351

ATTENTION AUTHORITY HAVING JURISDICTION

Notice is hereby given that Aho Architects, a sole proprietorship, the Architect of Record on the above referenced project, will be providing construction administration services on a limited basis, supplemented by a third-party independent engineering consulting service as described below.

This project has been designed by the Architect and Engineers ("Design Team") for its specific location, or adapted from prototypical designs, to comply with the following codes, ordinances, and similar requirements adopted by the Authority Having Jurisdiction ("AHJ"):

- **See codes listed on Sheet LS100.**

During the Construction Administration Phase of the Project:

- General: The Design Team will respond to inquiries or requests from the Owner or Contractor, specifically related to documents prepared by the Design Team. As is standard in Construction Law and Professional Service Agreements, the Design Team shall not have control over, charge of, or responsibility for the construction means, methods, techniques, sequences or procedures, or for safety precautions and programs in connection with the Project(s), nor shall the Architect be responsible for the Owner's or Contractor's failure to perform the work in accordance with the requirements of the Permit Set Documents. The Architect shall be responsible for the Architect's negligent acts or omissions, but shall not have control over or charge of, and shall not be responsible for, acts or omissions of the Owner, Contractor, or of any other persons or entities performing portions of the work.
- Experienced Contractor: The Owner will use experienced and licensed Contractors familiar with the construction of Projects of this type and in similar locations, and experienced with the applicable building codes, selection of materials and systems, and methods of installation and construction; and able to implement the Permit Set Documents through completion of the Project(s).
- Submittals: The Design Team's Basic Construction Administration Services include review of critical submittals (e.g. shop drawings) by engineering disciplines (Structural). The Design Team shall also review, approve or take other appropriate action on any submittal for which the AHJ requires approval by the Architect/Engineer, as Additional Services.
- Site Visits: The Architect and Design Engineers typically will not be making any site visits unless specifically required to do so.
  - The Owner has been advised and acknowledges that some States and AHJs require the Architect to perform at least some site visits or provide a notice such as this statement.
  - In consideration of this, the Owner will provide site visits, observation, testing, and related work by a third party independent engineering consulting service:
    - The Owner has an agreement with Terracon, a provider of geotechnical, environmental, construction materials and facilities engineering
    - Experienced Professional Engineers or field technicians under the responsible control of a Professional Engineer will perform site observation, construction materials testing, and required Special Inspections (per IBC Chapter 17; see Schedule of Special Inspections on structural drawings provided) including review of construction for conformance with the permit drawings, supplemental drawings, shop drawings/submittals, and similar relevant documents. Written reports shall be provided, with the Design Team included on the distribution list and involved in resolving any deficiencies noted or other items requiring the Design Team's input.
  - If the above provisions are not acceptable to the AHJ and the AHJ gives notice requiring the Architect to make site visit(s), the Owner has agreed to authorize the Architect's Additional Services and Reimbursable Expenses to comply with the AHJ's requirements.

If you have any questions, or if there is anything else we can do for you, please do not hesitate to contact April Cain, the project manager or Tim Aho, Architect at the address/phone listed below, or by email at HYPERLINK "mailto:acain@ahoarch.com" acain@ahoarch.com or HYPERLINK "mailto:taho@ahoarch.com" taho@ahoarch.com . Thank you very much, and we appreciate the opportunity to be involved in this project in your jurisdiction.

*Image above is generic. See Civil for actual site conditions

ARCHITECT

AHO ARCHITECTS, A SOLE PROPRIETORSHIP
1855 DATA DRIVE, SUITE 150
HOOVER, ALABAMA 35244
205-983-6000

CIVIL ENGINEER

CMW ARCHITECTS AND ENGINEERS
249 EAST MAIN STREET, SUITE 100
LEXINGTON, KENTUCKY 40507
859-254-6623

STRUCTURAL ENGINEER

JOHN JONES, SE, PE
125 18TH STREET NORTH
PELL CITY, ALABAMA 35125
205-884-5334

MECHANICAL / PLUMBING ENGINEER

PINNACLE ENGINEERING, INC.
2111 PARKWAY OFFICE CIRCLE, SUITE 125
BIRMINGHAM, ALABAMA 35244
205-733-6912

ELECTRICAL ENGINEER

GIDEON WAMAE, P.E.
4120 OVERLOOK CIRCLE
TRUSSVILLE, ALABAMA 35173
205-413-4112

FINAL

AHO ARCHITECTS
a sole proprietorship
www.ahoarch.com

TIMOTHY ARNOLD AHO
REGISTERED
NO. 9084
COMMONWEALTH OF KENTUCKY
ARCHITECT
10/04/2024

Express Oil Change & Tire Engineers
Single Building / Right Hand Oil Change / Front Enter / Side Tire Storage
Morehead, Kentucky

FINAL

No.	Description	Date

2024
© Aho Architects, a sole proprietorship
All Rights Reserved.

Title Sheet

Project number	24029
Date	10/04/2024
Drawn by	ARC
Checked by	N/A

T100

Scale	12" = 1'-0"

10/8/2024 3:54:14 PM

GENERAL PROJECT NOTES

1. These documents are considered accurate and true to the best knowledge of the Architect at this time, but do not necessarily represent, nor are they intended to represent, actual existing conditions, dimensions, and tolerances. Contractor shall field-verify existing conditions including, but not limited to materials, construction, elevations, and dimensions prior to bidding and undertaking the work. Items of concern shall be brought to the attention of the Architect. Submittal of a proposal (bid) by a Contractor and their Subcontractors shall constitute an acknowledgement and confirmation of having complied with these requirements.

2. All work shall comply with all applicable local, state, and national codes, rules, ordinances and regulations and authorities having jurisdiction.

3. The Contractor shall comply with all applicable provisions of the specifications, including, but not limited to all general conditions, supplementary general conditions, special conditions, and material and construction provisions, which apply to materials or construction methods required by this project.

4. Where warranties are concerned, Contractor shall follow manufacturer's standards and recommendations unless specifically directed otherwise. Any conditions which might negatively affect the warranty shall be brought to the attention of the Architect in advance.

5. The Owner and Contractor shall promptly report to the Architect any defects, suspected defects, or discrepancies in the Architect's work or services of which the Owner or Contractor may become aware, so that the Architect may take measures to minimize the consequences of such a defect. Failure to notify the Architect shall relieve the Architect of costs of remedying the defects above the sum such remedy would have cost had prompt notification been given.

6. Neither the professional activities of the Architect, nor the presence of the Architect or its employees and consultants at a construction site shall relieve the Contractor or others of their obligations, duties, and responsibilities including, but not limited to: construction means and methods, sequence, techniques, or procedures necessary for performing, superintending, or coordinating all portions of the work in accordance with the contract documents and any health and safety precautions required by agencies having jurisdictional authority over the project. The Architect and its personnel have no authority to exercise control over any Contractor or other entity or their employees in connection with their means, methods, or safety precautions. The Contractor is solely responsible for jobsite safety. The Owner, Architect, and their Consultants shall be indemnified and shall be made additional insureds under the Contractor's general liability insurance policy.

7. All work, unless specifically indicated otherwise, shall be the responsibility of the General Contractor and shall be performed by the tradesmen skilled in the required field.

8. "Provide" shall mean to furnish and install, complete and ready for intended use.

9. Provide pressure treated wood where in contact with concrete or masonry.

10. The Contractor shall be responsible for all cutting, fitting, and patching that may be required to complete the work.

11. Dimensions of existing construction and repetitive dimensions are sometimes omitted. Detailed dimensions not indicated may be found on large-scale drawings of the same areas. Drawings are intended to reflect the existing conditions as closely as possible, however, the Contractor shall field verify and accept all existing conditions and dimensions. Notify Architect of any discrepancies affecting the work.

12. Provide all temporary services required to facilitate the work indicated, including but not limited to the following: power, lighting, heat, and water.

13. The Contractor(s) shall provide all barriers, shoring, warning lights, etc. as required to conduct the work and maintain the site in a safe condition consistent with good construction practices and with all applicable rules and regulations.

14. All exist. utility services including domestic water, sanitary sewer, electricity, fuel oil and/or gas shall be disconnected and made safe prior to any demolition work. Any work which might require interruption of utility services to Owner or other tenants, shall be approved and coordinated beforehand with the Owner.

15. It is the intent of the bid and construction documents to indicate complete and fully operational systems (i.e. structural, HVAC, plumbing, electrical, roofing, etc.). The Contractor shall provide operational systems and testing which comply with applicable codes, regulations, and requirements of authorities having jurisdiction.

16. Any work or utility outages which might disrupt the operations of the Owner or others shall be approved and coordinated in advance with the Owner and the Architect. The Contractor shall give the Owner and Architect at least three days advance notice prior to undertaking work which might cause disruption. Activities which produce utility outages, excessive noise, dust and other disruption shall be coordinated with the Owner and Architect. Some of these activities may need to occur at "off hours" to minimize disruption of the Owner's operations.

17. All wood blocking, trim, decking, etc. shall be decay-resistant treated, or as specified.

18. To prepare substrate for all wall mounted items, wall fixture, toilet accessories, etc. - fill all voids in the CMU surface to provide a sound base (provide blocking in stud walls) for all new wall mounted items, fixtures, etc. Install per manufacturer's specifications and recommendations.

19. Do not paint any caulking or sealants which are subject to movement. Control joints shall be caulked after paint and special coating applications. Provide caulking or sealants in colors which match adjacent finished surface as approved by the Architect.

20. Bidders shall be responsible for obtaining a copy of the Geotech Report from the Owner.

21. The project may include some items that are delegated design. Bidders shall ensure these items are covered in their base bid.

22. All questions that affect cost, time, etc. shall be presented in the form of RFI's to the Architect prior to bid.

ENERGY CODE EXEMPTION

Per 2012 International Energy Conservation Code:

C101.5.2 Low Energy Buildings. The following buildings, or portions thereof, separated from the remainder of the building by building thermal envelope assemblies complying with this code, shall be exempt from the building thermal envelope provisions this code:

1. Those with a peak design rate of energy usage less than 3.4 Btu/h x ft2 or 1.0 watt/ft2 of floor area for space conditioning purposes.
2. Those that do not contain "conditioned space".

Per Chapter 2:
Definition of Conditioned Space: An area or room within a building being heated or cooled, containing uninsulated ducts, or with a fixed opening directly into an adjacent conditioned space.

While the Oil Change & Service areas do have radiant heaters, during normal operations, the Oil Change, Service, and Pit areas are **not enclosed** and are outside the building thermal envelope assembly. These areas are separated from the remainder of the building by building thermal envelope assemblies complying with this code. Later versions of the IECC (2018 and 2021) allow radiant heaters to be installed outside the building thermal envelope. Therefore, these areas shall be exempt from the building thermal envelope provisions of this code.

GENERAL ACCESSIBILITY NOTES

1. All door hardware shall be accessible type per section 404 of the 2017 ICC A117.1 / 2010 ADA Standards.

2. All walking surfaces shall have a maximum slope of 1:20 per section 405 of the 2017 ICC A117.1 / 2010 ADA Standards

3. All floor or ground surfaces shall be stable, firm, and slip resistant per section 302 of the 2017 ICC A117.1 / 2010 ADA Standards

4. Changes in level of 1/4" high maximum shall be permitted to be vertical per section 303 of the 2017 ICC A117.1 / 2010 ADA Standards

5. Provide maneuvering clearances at manual swinging doors per section 404 of the 2017 ICC A117.1 / 2010 ADA Standards

6. ADA mounting heights, dimensions, tolerances, etc. shall apply to all construction and the location of all fixtures, etc. unless specifically noted otherwise.

GENERAL INTERIOR NOTES

1. Quantities (area, perimeter, etc.) shown on finish schedule are approximate and are provided as a convenience to the Contractor. Actual quantities may vary and it is the responsibility of the Contractor to field verify.

2. Anything specified with a directional pattern (e.g. brushed aluminum, wood grain laminate, etc.) the pattern shall go in the same direction as directed by Architect.

3. The Contractor shall provide all necessary blocking in walls for support of all equipment, shelving, accessories, grab bars, and other required elements.

4. Provide pressure treated wood where in contact with concrete or masonry.

5. Ease all edges on casework to prevent sharp corners.

6. Paint all HVAC wall grilles to match adjacent surface color unless otherwise noted or instructed by the Architect.

7. Use moisture resistant gypsum board at all walls subject to moisture unless wall will be subject to standing water or frequent wetting in which case you shall use cementitious backer.

8. Provide thresholds where required. All shall be ADA compliant.

9. All gypsum board to have a level 4 finish unless otherwise indicated.

BIDDING INQUIRES

Company:	Express Oil Change
Contact:	Chris Plummer
E-Mail:	chris.plummer@expressoil.com
Phone:	205-945-1771
Note:	Sub-contractors to call bidding General Contractor for questions

Express Oil Change & Tire Engineers
2230 Flemingsburg Road
Morehead, Kentucky 40351

NORTH

Sheet Index

Sheet Number	Sheet Name
T100	Title Sheet
G100	General Information
G200	Architectural Specifications
G201	Architectural Specifications
G202	Architectural Specifications
G300	Architectural Specifications & EOC Standards - Exterior
G301	EOC Standards - Interior
G400	Building COMCheck
LS100	Life Safety / Code Summary
LS101	Life Safety / Code Summary
LS102	Life Safety Plan - Main
LS103	Life Safety - Pit
AS100	Architectural Site Plan
A100	Floor Plan - Main
A101	Pit Floor Plan and Site Details
A102	Foundation Details
A103	Enlarged Floor Plans and Details
A104	Reflected Ceiling Plan - Main
A105	Reflected Ceiling Plan - Pit
A107	Roof Plan
A106	Floor Plan - Platform
A200	Exterior Elevation - Front (North)
A201	Exterior Elevation - Rear (South)
A202	Exterior Elevation - Right (West)
A203	Exterior Elevation - Left (East)
A300	Building Sections
A301	Building Sections
A302	Building Sections
A303	Building Sections
A400	Wall Types
A600	Interior Elevations
A601	Interior Elevations
A602	Interior Elevations
A605	Interior Dimensional Info.
A610	Floor Finishes - Main
A611	Floor Finishes - Pit
A620	Schedules
A621	Finish Schedules & Head, Jamb, and Sill Details
R100	3D Views
R101	3D Views
S0.1	General Notes
S0.2	Typical Details
S0.3	Schedules
S1.1	Foundation Plan
S3.1	Roof Framing Plan
S5.1	Sections and Details
S5.2	Sections and Details
S5.3	Sections and Details
M0.01	Mechanical Legend, Abbreviations and Schedules
M0.02	Mechanical Specifications
M0.03	Mechanical Specifications
M0.04	Mechanical ComCheck
M1.01	Mechanical Floor Plan
M1.02	Partial Mechanical Plans - Pit and Platform
M1.03	Mechanical Roof Plan
M2.01	Mechanical Details
M2.02	Mechanical Details
P0.01	Plumbing Legend, Abbreviations, and Schedules
P0.02	Plumbing Specifications
P0.03	Plumbing Specifications
P1.01	Plumbing Floor Plan Gravity
P1.02	Plumbing Floor Plan Pressure
P1.03	Partial Plumbing Plans - Pit and Platform
P2.01	Plumbing Riser - Gravity
P2.02	Plumbing Riser - Pressure
P2.03	Plumbing Details
E100	General Notes and Fixture Schedules
E101	Symbol Legends and Details
E102	Single Line Diagram and Panelboard Schedules
E103	Details
E104	Site Plan - Electrical
E200	Main Level Plan - Lighting
E201	Pit Level Plan - Lighting
E202	Equipment Platform Plan - Lighting
E300	Main Level Plan - Power & Voice/Data
E301	Pit Level Plan - Power & Voice/ Data
E400	Main Level Plan - Elec. Conn. to Mech.
E500	Specifications
E600	ComCheck

AHO ARCHITECTS
a sole proprietorship
www.ahoarch.com

TIMOTHY ARNOLD AHO
REGISTERED
NO. 9084
COMMONWEALTH OF KENTUCKY
ARCHITECT
10/04/2024

Express Oil Change & Tire Engineers

Single Building / Right Hand Oil Change / Front Enter / Side Tire Storage

Morehead, Kentucky

FINAL

No.	Description	Date

2024
© Aho Architects, a sole proprietorship
All Rights Reserved.

General Information

Project number	24029
Date	10/04/2024
Drawn by	ARC
Checked by	N/A

G100

Scale 12" = 1'-0"

10/8/2024 3:54:15 PM

GENERAL NOTES

1. **GENERAL CONTRACTOR SHALL ENSURE EACH OF THE FOLLOWING HAVE BEEN REVIEWED BY THE MANUFACTURER FOR COMPLIANCE WITH LOCAL CONDITIONS/REQUIREMENTS PRIOR TO BIDDING/ORDERING/INSTALLING: ROOFING, DOORS, WINDOWS/STOREFRONT, GLAZING, DOOR HARDWARE, PAINT, AND FIRE EXTINGUISHERS.**
2. **GENERAL CONTRACTOR SHALL PROVIDE SUBMITTALS / SHOP DRAWINGS FOR EACH PRODUCT LISTED UNDER ARCHITECTURAL SPECIFICATIONS. ALL SUBMITTALS / SHOP DRAWINGS ARE TO BE APPROVED BY THE OWNER AND/OR THE A/E PRIOR TO ORDERING.**
3. **PROVIDE MANUFACTURER'S STANDARD WARRANTY FOR ALL SPECIFIED PRODUCTS.**
4. **ALL EXTERIOR SIGNAGE AND SCONCES BY OTHERS.**
5. **ALL FURNITURE AND EQUIPMENT BY OTHERS. COORDINATE PLACEMENT WITH OWNER PRIOR TO ROUGHING IN REQUIRED UTILITIES.**
6. **ALL COMPARABLE PRODUCTS TO BE REVIEWED AND APPROVED BY THE OWNER PRIOR TO BID.**
7. **GC SHALL BE RESPONSIBLE FOR CHECKING WITH THE LOCAL AHJ ON ANY DEFERRED SUBMITTALS THAT MAY BE REQUIRED TO BE APPROVED BY THE AHJ PRIOR TO CONSTRUCTION.**

DIVISION 4 - MASONRY

042200 - Concrete Unit Masonry

Basis-of-Design Product: Subject to compliance with requirements, provide products indicated below by Block USA or a comparable product by an approved manufacturer.

Products

A. Concrete Masonry Units
1. Finish: Smooth and split-face
2. Min. Compressive Strength: See Structural
3. Density Classification: See Structural
4. Provide types, shapes and sizes as indicated
5. Integral Water Repellent: Provide RainBloc 80 by ACM Chemistries or a comparable product by an approved manufacturer.

Basis-of-Design Product: Subject to compliance with requirements, provide products indicated below by Argos or an approved comparable product by an approved manufacturer.

Products

B. Mortar
1. Type: See Structural
2. Color: Argos Magnolia Dark at cmu.
3. Liquid Mortar Additive: Provide RainBloc for Mortar or a comparable product by an approved manufacturer.

Subject to compliance with requirements, provide products indicated below:

Products

C. Joint Reinforcement
1. Type: Hot dipped galvanized, carbon steel (truss)
2. Size: 0.187" diameter
3. Length: Not less than 10'

Basis-of-Design Product: Subject to compliance with requirements, provide products indicated below by Mortar Net Solutions or an approved comparable products by an approved manufacturer.

Subject to compliance with requirements, provide products indicated below:

D. Single Wythe Concrete Masonry Unit Drainage System

1. BlockFlash

055000- Metal Fabrications

Products:

A. Concrete-filled Steel Pipe Bollards
1. Material: Schedule 40 steel pipe
2. Height: 3'-6"
3. Diameter: 4"
4. Finish: Painted (See Finish Schedule)

Installation:
See drawings for installation details.

055113- Metal Pan Stairs

Delegated Design: Engage a qualified professional engineer to design stairs and railings and provide sealed calculations and drawings.

Products:

A. Metal Pan Stairs
1. Steel Sheet Thickness: 0.067" minimum
2. Uniform Load: 100 lbf/sf
3. Concentrated Load: 300 lbf applied on an area of 4 sq. in.
4. Finish: Painted (See Finish Schedule)
5. Uniform and concentrated loads need not be assumed to act concurrently.
6. Stair Framing: Capable of withstanding stresses resulting from railing loads in addition to loads specified above.

B. Stair Tread Bar Ribbed Abrasive Nosing
1. Basis of Design: Nystrom Model V951
2. Extents: Install Nosing to the full length of steps
3. Color: Safety Yellow
4. Type: Short Nose, Aluminum Extruded Anchor

C. Stair Railings
1. Rails and Posts: 1 5/8" diameter
2. Picket Infill: 1/2" round pickets spaced less than 4 inches clear.

D. Installation: Install per manufacturer's standard written instructions.

E. Warranty: Provide manufacturer's standard material warranty.

055133 - Ladders

Manufacturers:
Basis-of-Design Product: Subject to compliance with requirements, provide products indicated below by Grainger, or a comparable product by an approved manufacturer:

Product:

A. Fixed Welded-Steel Ladder by Grainger
1. Model F14S C1 Cotterman Fixed (Pit Ladder)
a. Width: 20 inches
b. Height: 13 feet

Installation:
Install ladder according to manufacturer's written instructions.

055213- Pipe and Tube Railings

Delegated Design: Engage a qualified professional engineer to design stairs and railings and provide sealed calculations and drawings.

A. Handrails & Top Rails of Guards
1. Rails and Posts: 1 1/2" diameter
2. Uniform Load: 50lbf/ft in any direction.
3. Concentrated Load: 200 lbf applied in any direction
4. Uniform and concentrated loads need not be assumed to act concurrently.
5. Type: F or S
6. Material: Schedule 40
7. Finish: Painted (See Finish Schedule)
8. Seismic Performance: See Structural

B. Infill of Guards
1. Concentrated Load: 50 lbf applied horizontally on an area of 1 SF.
2. Infill load and other loads need not be assumed to act concurrently.

Installation:
Install stairs and railings according to manufacturers' written instructions and with welded connections.

DIVISION 6 - WOOD, PLASTICS AND COMPOSITES

061000- Rough Carpentry

Products:

A. Framing with Dimensional Lumber (Interior Non-Load-Bearing)
1. Thoroughly Dried
2. No. 2 Southern Yellow Pine or No. 2 Douglas Fir
3. Of sizes, shapes, and lengths required.
4. Moisture content shall not exceed 19% at time of installation

B. Miscellaneous Lumber (e.g. Blocking, Furring, etc.)
1. Thoroughly Dried
2. No. 2 Southern Yellow Pine or No. 2 Douglas Fir
3. Of sizes, shapes, and lengths required.
4. Moisture content shall not exceed 19% at time of installation

C. Temporary Bracing, Shoring, etc. as required
1. Thoroughly Dried
2. No. 2 Southern Yellow Pine or No. 2 Douglas Fir
3. Of sizes, shapes, and lengths required.
4. Moisture content shall not exceed 19% at time of installation

D. Plywood decking (Equipment Platform)
1. Plywood Type: Exposure 1
2. Plywood Grade: BC
3. Thickness: As indicated on drawings
4. Square Edge
5. Class: C Fire Rating
6. Flame Spread Rating 76-200 / Smoke Developed Index <450

E. Plywood decking (Dumpster Roof)
1. Plywood Type: Exposure 1
2. Plywood Grade: BC
3. Thickness: As indicated on drawings
4. Square Edge

Note:
1. All plywood which has any edge or surface permanently exposed to the weather shall be of the exterior type.
2. All wood exposed to weather and/or in contact with masonry or concrete shall be pressure-treated lumber.

061533- Composite Decking

Products

A. Plastic Decking for Dumpster Enclosure Doors
1. Composite plastic lumber
2. Solid shapes made from a mixture of cellulose fiber and polyethylene or polypropylene.
3. Surface Texture: Smooth.
4. Color: See Finish Schedule.
5. Size: See dumpster details.

Installation:
Install plastic decking according to manufacturers' written instructions.

Warranty:
Provide manufacturer's standard material warranty.

066400 Plastic Paneling (Fiberglass Reinforced Panels)

Basis-of-Design Product: Subject to compliance with requirements, provide products indicated below by Marlite Wall Systems, or a comparable product by one of the following:

1. Kal-Lite
2. Crane Composites
3. Panolam

Product Requirements:

A. Provide standard FRP (Fiber Reinforced Plastic) panels in 4' x 8' textured panels.
B. Color: As indicated on the Finish Schedule.
C. Conform to all building code requirements for interior finish for smoke and flame spread requirements tested in accordance with ASTM 84
D. Wall required Rating - Class A

Submittals:
Submit shop drawings (elevations of each wall) showing location of paneling and trim members.

Installation:
A. Install per manufacturer's written standards.

Warranty:
A. Provide manufacturer's standard warranty.

DIVISION 7 - THERMAL AND MOISTURE PROTECTION

071900- Water Repellents

Basis-of-Design Product: Subject to compliance with requirements, provide products indicated below by Ghostshield or a comparable product from an approved manufacturer.

Products

A. Water Repellant
1. ISO-Tek 8540
2. Color: Clear

Installation:
Install water repellents according to manufacturers' written instructions.

Warranty:
Provide manufacturers' standard product warranty.

072100- Thermal Insulation

Basis-of-Design Product: Subject to compliance with requirements, provide products indicated below by Owens Corning, or a comparable product by one of the following:

1. Johns Manville
2. CertainTeed

Products:

A. Kraft Faced (Vapor Retarder) Batt Insulation:
1. EcoTouch PINK Fiberglass Insulation
2. R-20 & R-38; where indicated

B. Continuous Rigid Insulation:
1. R-10 & R-7.6; where indicated

Installation:
Install insulation and accessories according to manufacturers' written instructions.

Warranty:
Provide manufacturers' standard material warranty.

072600 Vapor Retarders

Basis-of-Design Product: Subject to compliance with requirements, provide products indicated below by Reef Industries, or a comparable product by an approved manufacturer.

Products:

A. Reinforced Under Slab Vapor Retarder:
1. Griffolyn 10 Mil Green
2. Thickness: 10 mil
3. Max Perm Rating: 0.1 perm
4. Lap: 12" and tape with manufacturer recommended tape

Installation:
Install vapor retarders according to manufacturers' written instructions.

Warranty:
Provide manufacturers' standard product warranty.

072726- Fluid-Applied Membrane Air Barrier

Basis-of-Design Product: Subject to compliance with requirements, provide products indicated below by W.R. Meadows, or a comparable product by an approved manufacturer.

Products:

A. Liquid Membrane Air/Vapor & Liquid Moisture Barrier
1. Air-Shield LMP

Installation:
Install fluid applied membrane air barriers according to manufacturers' written instructions.

Warranty:
Provide manufacturer's standard product warranty.

074113.16- Standing-Seam Metal Roof Panels (Standard)

Basis-of-Design Product: Subject to compliance with requirements, provide products indicated below by Berridge Manufacturing Co. or comparable product by an approved manufacturer.

Products:

A. Metal Panel: Cee-Lock

1. Structural Performance: Provide metal panel systems capable of withstanding the effects of the following loads, based on testing according to ASTM E 1592.
a. Wind Loads: See Structural.
b. Other Design Loads: See Structural.
c. Deflection Limits: See Structural.

074113.16- Standing-Seam Metal Roof Panels (Standard)

2. Air Infiltration: Air leakage of not more than 0.06 cfm/sq. ft when tested according to ASTM E 1680 and ASTM E 283 at the following test-pressure difference:
a. Test-Pressure Difference: 6.24 lbf/sq.ft.
3. Water Penetration under Static Pressure: No water penetration when tested according to ASTM E 1646 and ASTM E 331 at the following test-pressure difference:
a. Test-Pressure Difference: 15 lbf/sq.ft.
4. Wind-Uplift Resistance: Provide metal roof panel assemblies that comply with UL 580 for wind-uplift-resistance class indicated.
a. Uplift Rating: UL 90.
5. Thermal Movements: Allow for thermal movements from ambient and surface temperature changes by preventing buckling, opening of joints, overstressing of components, failure of joint sealants, failure of connections, and other detrimental effects.
6. Material: Metallic coated steel
7. Nominal Thickness: 24 gauge
8. Finish: Two-coat fluoropolymer.
9. Color: See Finish Schedule (verify sample with Owner prior to ordering)
10. Panel Coverage: 16.5 inches
11. Panel Height: 1.5 inches
12. Slope: As indicated on roof plan

Installation:
Install metal panels, underlayment, vents, and accessories according to manufacturers' written instructions.

Warranty:
Provide manufacturers' standard material and product warranties.

075423- Thermoplastic Polyolefin (TPO) Roofing:

Basis-of-Design Product: Subject to compliance with requirements, provide products indicated below by Versico or comparable product by an approved manufacturer.

Products:

A. VersiWeld 60 mil TPO fully adhered.

1. ASTM D6878

B. Underlayment: 1/2" Securock Gypsum Fiber Cover Board

C. Polyisocyanurate Insulation

1. Thickness: R-25

D. Roof Walkways

1. VersaWeld Heat Weldable Walkway Rolls

a. Color: White
b. Thickness: 180 mils
c. As an option, walkway rolls may be fully adhered to the membrane surface with QA Seam Tape/ TPO Primer.

Installation:
Install TPO, underlayment, insulation, vents, accessories, etc., according manufacturer's published installation instructions.

Warranty:
Provide 20 Year NDL Manufacturers full system warranty

076500 - Stainless Steel Flexible Flashing

Basis-of-Design Product: Subject to compliance with requirements, provide products indicated below by York Manufacturing, inc., or a comparable product by an approved manufacturer.

Products:
A. Multi-Flash SS
1. Type: Stainless steel core with polymer fabric laminated to the bottom stainless steel face with non-asphaltic adhesive. The top face (exposed side) must not be covered with a a polymer fabric.
2. Stainless steel: type 304, ASTM A240 Domestically sourced per DFARS 252.225-7008 and /or DFARS 252.225-7009
3. Provide Drip Edge: Drip Edge: Stainless-steel with 30-degree 3/8" bent outer edge, hemmed. 3" by 8'

B. Installation: Install per manufacturer's written instructions.

C. Warranty: Manufacturer: **Warrant flexible flashing material for life of the wall**.

077100- Roof Specialties (Standard)

Basis-of-Design Product: Subject to compliance with requirements, provide products indicated below by Roof Drainage Components & Accessories, Inc. or a comparable product by an approved manufacturer.

Products:

A. Conductor head (alum.): Match downspout color.

B. Downspouts (alum.):
1. Style: Smooth Box Downspout
2. Size: 3"x4"
3. Color: Match P-2

C. Downspout elbow - Match downspout color

D. Straps
1. Smooth Box Downspout Strap.
2. Color: Match Roof Color.

E. Thru-wall scupper- Match downspout color.

Basis-of-Design Product: Subject to compliance with requirements, provide products indicated below by Metal Era Roofing Products or comparable product by an approved manufacturer.

A. Coping Cap
1. Product: Creative Design Series - Creative Design Reveal Coping
2. 22 gauge w/ kynar finish
3. Color : To be selected from Manufacturer's Full Range of colors
4. Face & Back Dimension: 4 inches minimum (Dumpster)
5. Face Dimension: 12 inches minimum (Building)
6. Back Dimension: 8 inches minimum (Building)

Installation:
Install roof specialties according to manufacturers' written instructions.

Warranty:
Provide manufacturers' standard material warranty.

AHO ARCHITECTS
a sole proprietorship
www.ahoarch.com

TIMOTHY ARNOLD AHO
REGISTERED
NO. 9084
COMMONWEALTH OF KENTUCKY
ARCHITECT
10/04/2024

Express Oil Change & Tire Engineers

Single Building / Right Hand Oil Change / Front Enter / Side Tire Storage

Morehead, Kentucky

FINAL

No.	Description	Date

© 2024
Aho Architects, a sole proprietorship
All Rights Reserved.

Architectural Specifications

Project number	24029
Date	10/04/2024
Drawn by	ARC
Checked by	N/A

G200

Scale 12" = 1'-0"

10/8/2024 3:54:16 PM

078443 - Joint Firestopping

Basis-of-Design Product: For joints in or between Fire-Resistance-Rated Construction: Subject to compliance with requirements, provide products indicated below by Tremco, or a comparable product by one of the following:

1. 3M Fire Protection Products
2. Owens Corning
3. Hilti, Inc.
4. ROCKWOOL

A. **Scope:** Work specified under this Section includes all labor, materials, equipment, services, accessories and coordination as required to furnish and install all firestopping systems including but not limited to, the following:
   1. Firestopping sealant, firesafing and material required to render all fire rated assemblies fire and smoke tight in accordance with applicable codes, ordinances and requirments.
   2. Penetrations of fire rated materials or assemblies shall be sealed by the trade whose work required the penetration, unless a firestop contractor is designated by the Contractor

B. **System Description/ Design Requirements:**
   1. Fire-Rated Construction: Maintain vertical and horizontal barrier, structural floor-ceiling, and roof-ceiling fire resistance ratings at all penetrations, connections with other surfaces or types of construction, at separations required to permit building movement and sound or vibration absorption, and at other construction gaps.
   2. Smoke Barrier Construction: Maintain vertical barrier and structural floor resistance to cold smoke at all penetrations, connections with other surfaces and types of construction and at all separations required to permit building movement and sound or vibration absorption, and at other construction gaps.
   3. Provide products that upon curing, do not re-emulsify, dissolve, leach, breakdown or otherwise deteriorate over time from exposure to atmospheric moisture, sweating pipes, ponding water or other forms of moisture.
   4. Provide firestop products that do not contain ethylene glycol.
   5. Fire resistance rating must be equal to or exceed the fire resistance rating of the wall, floor or roof in or between which it is installed.
   6. Exposed Joint firestopping systems must have a flame-spread and smoke-developed index of less than 25 and 450, respectively, as determined per ASTM E84

C. Installation:
   1. Firstopping shall be installed at locations where openings are made and where shown or specified in accordance with manufacturer's written instructions, fire test assembly and as indicated on drawings.
   2. Firestopping materials shall completely fill all void spaces regardless of of geometric configuration and subject to tolerances established by the manufacturer.
   3. Firestopping shall be installed at all piping, electrical conduit and cables,and ductwork penetrating fire rated assemblies and seal holes or voids made by penetrations to ensure an effective fire or fire/smoke barrier. Fire dampster in ducts and penetrations of fire resistance rated construction shall be furnished and installed in accordance with the requirements in Mechanical Sections.
   4. Identify joint firestopping systems with legible metal or plastic labels. Attach labels permanently to surfaces adjacent to and within 6 inches of joint edge so labels are visible to anyone seeking to remove joint firestopping system. Include the following on the labels:
      a. "Warning - Joint Firestopping - Do NOT Disturb. Notify Building Management of Any Damage."
      b. Contractor's name, address and phone number.
      c. Designation of applicable testing agency
      d. Date of Installation
      e. Manufacturer's name
      f. Installer's name

D. Warranty: Provide manufacturers' standard product warranty.

079200- Joint Sealants

Basis-of-Design Product: Subject to compliance with requirements, provide products indicated below by Tremco, or a comparable product by one of the following:

1. BASF Building Systems
2. Pecora Corporation
3. Dow Corning Corp.

Products:

A. Silicone (for use around plumbing fixtures and around glazing):
   1. Spectrem 2
   2. Color: Clear

B. Urethane (for use at masonry, control joints, and rough openings)
   1. Dymonic 100
   2. Color: To match adjacent material color (color and paintable)

C. Joint Sealant Backing:
   1. Closed cell material with a surface skin or as approved by sealant manufacturer

Installation:
Install sealants and proper backing according to manufacturers' written instructions.

Warranty:
Provide manufacturers' standard product warranty.

079219- Acoustical Joint Sealants

Basis-of-Design Product: Subject to compliance with requirements, provide products indicated below by USG or a comparable product by an approved manufacturer.

Products:

A. Acoustical Joint Sealant
   1. USG Sheetrock Brand Acoustical Sealant

Installation:
Install sealants according to manufacturers' written instructions.

Warranty:
Provide manufacturer's standard warranty.

DIVISION 08 - OPENINGS

081113- Hollow Metal Doors and Frames (Standard)

Manufacturers:

Basis-of-Design Product: Subject to compliance with requirements, provide products indicated below by CECO Door Products, or a comparable product by one of the following:

1. Curries Company
2. Steelcraft
3. Or Approved equal

Products:

Materials

A. Cold-Rolled Steel Sheet: ASTM A 1008/A 1008M, Commercial Steel (CS), Type B; suitable for exposed applications.
B. Metallic-Coated Steel Sheet: ASTM A 653/A 653M, Commercial Steel (CS), Type B; with minimum G60 (Z180) or A60 (ZF180) metallic coating.
C. Frame Anchors: ASTM A 653/A 653M, Commercial Steel (CS), Commercial Steel (CS), Type B; with minimum G60 (Z180) or A60 (ZF180) metallic coating.

Hollow Metal Doors

A. General: Provide 1-3/4 inch doors of design indicated, not less than thickness indicated; fabricated with smooth surfaces, without visible joints or seams on exposed faces unless otherwise indicated. Comply with ANSI/SDI A250.8 and ANSI/NAAMM HMMA 867.

B. Exterior Doors (Energy Efficient): Face sheets fabricated of commercial quality hot-dipped zinc coated steel that complies with ASTM A924 A60. Provide doors complying with requirements indicated below by referencing ANSI/SDI A250.8 for level and model, ANSI/SDI A250.4 for physical performance level, and HMMA 867 for door construction.
   1. Design: Flush panel.
   2. Core Construction: Foamed in place polyurethane and steel stiffened laminated core with no stiffener face welds, in compliance with HMMA 867 "Laminated Core".
      a. Provide 22 gauge steel stiffeners at 6 inches on-center internally welded at 5" on-center to integral core assembly, foamed in place polyurethane core chemically bonded to all interior surfaces. No stiffener face welding is permitted.
      b. Thermal properties to rate at a fully operable minimum U-Factor 0.29 and R-Value 3.4, including insulated door, thermal-break frame and threshold.
      c. Kerf Type Frames: Thermal properties to rate at a fully operable minimum U-Factor 0.36 and R-Value 2.7, including insulated door, kerf type frame, and threshold.
   3. Level/Model: Level 3 and Physical Performance Level A (Extra Heavy Duty), Minimum 16 gauge (0.053 inch - 1.3-mm) thick steel, Model 2.
   4. Vertical Edges: Vertical edges to be mechanically interlocked with hairline seam. Beveled Lock Edge, 1/8 inch in 2 inches (3 mm in 50 mm).
   5. Top and Bottom Edges: Reinforce tops and bottoms of doors with a continuous steel channel not less than 16 gauge, extending the full width of the door and welded to the face sheet. Doors with an inverted top channel to include a steel closure channel, screw attached, with the web of the channel flush with the face sheets of the door. Plastic or composite channel fillers are not acceptable.
   6. Hinge Reinforcement: Minimum 7 gauge (3/16") plate 1-1/4" x 9".
   7. Hardware Reinforcements: Fabricate according to ANSI/SDI A250.6 with reinforcing plates from same material as door face sheets.

C. Exterior Doors: Face sheets fabricated of commercial quality hot-dipped zinc coated steel that complies with ASTM A 653/A 653M, Coating Designation A60. Provide doors complying with requirements indicated below by referencing ANSI/SDI A250.8 for level and model and ANSI/SDI A250.4 for physical performance level.
   1. Design: Flush panel.
   2. Level/Model: Level 2 and Physical Performance Level B (Heavy Duty), Minimum 18 gauge (0.042-inch - 1.0-mm) thick steel, Model 2.
   3. Top and Bottom Edges: Reinforce tops and bottoms of doors with a continuous steel channel not less than 16 gauge, extending the full width of the door and welded to the face sheet. Doors with an inverted top channel to include a steel closure channel, screw attached, with the web of the channel flush with the face sheets of the door. Plastic or composite channel fillers are not acceptable.
   4. Hinge Reinforcement: Minimum 7 gauge (3/16") plate 1-1/4" x 9" or minimum 14 gauge continuous channel with pierced holes, drilled and tapped.
   5. Hardware Reinforcements: Fabricate according to ANSI/SDI A250.6 with reinforcing plates from same material as door face sheets.

D. Interior Doors (Energy Efficient): Face sheets fabricated of commercial quality cold rolled steel that complies with ASTM A366 or 620. Provide doors complying with requirements indicated below by referencing ANSI/SDI A250.8 for level and model and ANSI/SDI A250.4 for physical performance level:
   1. Design: Flush panel.
   2. Core Construction: Steel stiffened laminated core with fiberglass filler with no stiffener face welds, in compliance with HMMA 867 "Laminated Core".
      a. Provide 22 gauge steel-stiffeners at 6 inches on-center internally welded at 5" on- center to integral core assembly, No stiffener face welding is permitted.
      b. Acoustical sound transmission rating shall be no less than STC 38 complying with ASTM E 90 and must be visible on factory applied labels.
   3. Level/Model: Level 2 and Physical Performance Level A (Heavy Duty), Minimum 18 gauge (0.042 inch - 1.1-mm) thick steel, Model 2.
   4. Vertical Edges: Vertical edges to be mechanically interlocked with hairline seam. Beveled Lock Edge, 1/8 inch in 2 inches (3 mm in 50 mm).
   5. Top and Bottom Edges: Reinforce tops and bottoms of doors with a continuous steel channel not less than 16 gauge, extending the full width of the door and welded to the face sheet. Doors with an inverted top channel to include a steel closure channel, screw attached, with the web of the channel flush with the face sheets of the door. Plastic or composite channel fillers are not acceptable.
   6. Hinge Reinforcement: Minimum 7 gauge (3/16") plate 1-1/4" x 9".
   7. Hardware Reinforcements: Fabricate according to ANSI/SDI A250.6 with reinforcing plates from same material as door face sheets.

E. Interior Doors: Face sheets fabricated of commercial quality cold rolled steel that complies with ASTM A 1008/A 1008M. Provide doors complying with requirements indicated below by referencing ANSI/SDI A250.8 for level and model and ANSI/SDI A250.4 for physical performance level:
   1. Design: Flush panel.
      a. Fire Door Core: As required to provide fire-protection and temperature-rise ratings indicated.
   2. Level/Model: Level 2 and Physical Performance Level B (Heavy Duty), Minimum 18 gauge (0.042-inch - 1.0-mm) thick steel, Model 2.
   3. Top and Bottom Edges: Reinforce tops and bottoms of doors with a continuous steel channel not less than 16 gauge, extending the full width of the door and welded to the face sheet.
   4. Hinge Reinforcement: Minimum 7 gauge (3/16") plate 1-1/4" x 9" or minimum 14 gauge continuous channel with pierced holes, drilled and tapped.
   5. Hardware Reinforcements: Fabricate according to ANSI/SDI A250.6 with reinforcing plates from same material as door face sheets.

F. Manufacturers Basis of Design:
   1. CECO Door Products (C) Honeycomb Core - Regent Series.

Hollow Metal Frames

A. General: Comply with ANSI/SDI A250.8 and with details indicated for type and profile.
B. Exterior Frames: Fabricated of hot-dipped zinc coated steel that complies with ASTM A 653/A 653M, Coating Designation A60.
   1. Fabricate frames with mitered or coped corners. Profile as indicated on drawings.
   2. Manufacturers Basis of Design:
      a. CECO Door Products (C) – SQSeries.
      b. Curries Company (CU) – M Series.
C. Interior Frames: Fabricated from cold-rolled steel sheet that complies with ASTM A 1008/A 1008M.
   1. Fabricate frames with mitered or coped corners. Profile as indicated on drawings.
   2. Manufacturers Basis of Design:
      a. CECO Door Products (C) - SQ Series.
      b. Curries Company (CU) - M Series.
D. Fire rated frames: Fabricate frames in accordance with NFPA 80, listed and labeled by a qualified testing agency, for fire-protection ratings indicated.
E. Hardware Reinforcement: Fabricate according to ANSI/SDI A250.6 Table 4 with reinforcement plates from same material as frames.

DIVISION 08 - OPENINGS

081113- Hollow Metal Doors and Frames (Standard)

Frame Anchors

A. Jamb Anchors:
   1. Masonry Type: Adjustable strap-and-stirrup or T-shaped anchors to suit frame size, formed from A60 metallic coated material, not less than 0.042 inch thick, with corrugated or perforated straps not less than 2 inches wide by 10 inches long; or wire anchors not less than 0.177 inch thick.
   2. Stud Wall Type: Designed to engage stud and not less than 0.042 inch thick.
   3. Compression Type for Drywall Slip-on (Knock-Down) Frames: Adjustable compression anchors.
   4. Windstorm Opening Anchors: Types as tested and required for indicated wall types to meet specified wind load design criteria.
B. Floor Anchors: Floor anchors to be provided at each jamb, formed from A60 metallic coated material, not less than 0.042 inches thick.
C. Mortar Guards: Formed from same material as frames, not less than 0.016 inches thick.

Installation:
Install hollow metal doors and frames according to manufacturers' written instructions.

Warranty:
Provide manufacturers' standard product warranty.

081416- Flush Interior Wood Doors

Door Construction - General
A. WDMA I.S.1-A Performance Grade: Extra Heavy Duty; Aesthetic Grade: Premium.
B. U-Factor: 0.50
Core Construction
A. Particleboard Core Doors:
   1. Particleboard: Wood fiber based materials complying with ANSI A208.1 Particleboard standard. Grade LD-2.
   2. Adhesive: Fully bonded construction using Polyurethane (PUR) glue.
   3. Blocking: As indicated under article "Blocking".
Veneered Doors for Painted Finish
A. Manufacturers: Subject to compliance with requirements, provide products by one of the following:
   1. ASSA ABLOY Wood Doors (GR): GPD Series.
   2. Eggers Industries (EG): Premium Series.
   3. Marshfield-Algoma (MF): Signature Series.
   4. VT Industries (VT): Artistry Series.
B. Interior Solid Core Doors:
   1. Grade: Custom.
   2. Faces: Veneer grades as noted below; veneer minimum 1/50-inch (0.5mm) thickness at moisture content of 12% or less.
      a. Rotary Sliced Natural Birch, A grade faces.
   3. Match between Veneer Leaves: Book match.
   4. Assembly of Veneer Leaves on Door Faces:
      a. Running Match.
   5. Pair and Set Match: Provide for doors hung in same opening or separated only by mullions.
   6. Transom Match: Continuous match.
   7. Vertical Edges: Matching same species as faces. Wood or composite material, one piece, laminated, or veneered. Minimum requirements per WDMA section P-1, Performance Standards for Architectural Wood Flush Doors.
   8. Horizontal Edges: Solid wood or structural composite material meeting the minimum requirements per WDMA section P-1, Performance Standards for Architectural Wood Flush Doors
   9. Construction: Five plies. Stiles and rails are bonded to core, then entire unit sanded before applying face veneers.
   10. At doors over 40% of the face cut-out for lights and or louvers, furnish engineered composite lumber core.
Light Frames and Glazing
A. Metal Frames for Light Openings in doors with up to 1-inch thick insulated glazing.
   1. Low profile beveled vision lite frame
   2. Color: Gray
   3. 20 gauge cold rolled steel
   4. Mitered and welded corners with counter sunk mounting holes
   5. Size as indicated on plans.
B. Glazing: Comply with installation requirements in Division 08 Section "Glazing" and with the flush wood door manufacturer's written instructions.
Fabrication
A. Factory fit doors to suit frame opening sizes indicated.
   1. Comply with requirements in NFPA 80 for fire rated doors.
   2. Undercut: As required per manufacturer's templates and sill condition.
B. Factory machine doors for hardware that is not surface applied. Comply with final hardware schedules, door frame Shop Drawings, DHI A115-W series standards, and hardware templates.
   1. Coordinate with hardware mortises in metal frames to verify dimensions and alignment before factory machining.
   2. Metal Astragals: Factory machine astragals and formed steel edges for hardware for pairs of fire rated doors.
C. Openings: Cut and trim openings through doors in factory.
   1. Light Openings: Trim openings with moldings of material and profile indicated.
   2. Glazing: Comply with applicable requirements in Division 08 Section "Glazing."

Installation
A. Install per manufacturers' standard written instructions.

Warranty
A. Provide manufacturers' standard material warranty.

083113- Access Doors and Frames

Manufacturers:

Basis-of-Design Product: Subject to compliance with requirements, provide products indicated below by Williams Brothers, or a comparable product by an approved manufacturer.

Products:
A. Insulated Aluminum Access Door:
   i. Model Number: #WB AL 1500 36x36
   ii. Lock: WB Cylinder Lock (keyed alike with 2 keys per lock)

Installation:
1. Install attic access according to manufacturer's written instructions.

Warranty:
1. Provide manufacturers' standard product warranty.

083613- Sectional Doors (Standard and Hurricane Non-Impact):

Manufacturers:

Basis-of-Design Product: Subject to compliance with requirements, provide products indicated below by Raynor Garage Doors, or a comparable product by an approved manufacturer.

Please note: Overhead Door Company is not an approved manufacturer.

Products:

Notes:
1.) All glazing to have proper labels as required by local AHJ and building codes .
2.) All glazing shall be reviewed and approved by the local distributor to meet the requirements for the region in which the glazing is being installed. Any issues with items specified shall be brought to the attention of the Architect prior to bid.

1.1 MANUFACTURERS
A. Acceptable Manufacturer: Raynor, which is located at: 1101 East River Rd. P. O. Box 448; Dixon, IL 61021-0448; Toll Free Tel: 800-4-RAYNOR; Tel: 815-288-1431; Fax: 888-598-4790; Email: HYPERLINK "https://admin.arcat.com/users.pl?action=UserEmail&company=Raynor&coid=35092&rep=&fax=888-598-4790&message=RE:%20Spec%20Question%20(08360rgd):%20%20&mf=" request info (architectsupport@raynor.com); Web:http://www.raynor.com
B. Requests for substitutions will be considered in accordance with provisions of Section 01 60 00 - Product Requirements.

1.2 SECTIONAL RIBBED PAN DOOR **(Standard Windload)**
A. SteelForm as manufactured by Raynor Garage Doors:
   1. Doors:
      a. Operation:
         1) Provide doors designed for manual operation.
      b. Jamb Construction:
         1) Steel jambs with self-tapping fasteners.
      c. Structural Performance Requirements:
         1) Wind Loads: See Structural.
   2. Sections:
      a. SteelForm S24C (Basic):
         1) Section end stiles and center stiles to be a minimum 16 gauge galvanized steel. End stiles and center stiles to be riveted to outside face with stainless steel rivets and resistance welded to interior rail.
         2) Material: Steel pan construction, 2 inches thick, roll formed from 24 gauge embossed thickness, commercial quality, hot-dipped galvanized (G40) steel complying with ASTM A 653. Exterior of door to have two deep ribs, four pencil grooves, and roll-formed tongue-and-groove joints for weathertight closure.
         3) Finish: Exterior skin to have two coats of paint, one primer coat and one finish coat.
            a) Color: White polyester paint.
      b. Seals: Bottom of door to have flexible U-shaped vinyl seal retained in aluminum rail. Optional blade seal on top section to prevent airflow above header
      c. Trussing: Doors designed to withstand specified windload. Deflection of door in horizontal position to be maximum of 1/1120th of door width.
   3. Windows: Locations to comply with door elevation drawings.
      a. Full-view windows consisting of aluminum stile and rail construction and (where applicable) color matched to door exterior with powdercoat paint in specified door sections. - See door elevation sheet.
      b. Non-Impact Rated Glazing: 1/4 inch Clear Tempered Glass consisting of one pane of 1/4 inch non-insulated glass.
   4. Mounting: Sections mounted in door opening using:
      a. Lap Jamb Angle Mounting: section overlap door jambs by 1 inch on each side of door opening.
   5. Track:
      a. Material: Hot-dipped galvanized steel (ASTM A 653), fully adjustable for adequate sealing of door to jamb or weatherseal.
      b. Track Size: 2 inches.
         1) Jamb Type: Steel.
            a) Mounting: QuikClip. Clip-Angle brackets pre-assembled to continuous angle from floor to door header and continuous angle from door header to door shaft. Angle Size: 2-5/16 x 1-1/4 x 3/32 inches.
   6. Counterbalance:
      a. Counterbalance System: Provided with aircraft-type, galvanized steel lifting cables with minimum safety factor of 5. Torsion Springs consisting of heavy-duty oil-tempered wire torsion springs on a continuous ball-bearing cross-header shaft.
         1) Spring Cycle Requirements: High cycle: 50,000 cycles.
   7. Hardware:
      a. Hinges and Brackets: Fabricated from galvanized steel.
      b. Perimeter Seal: Provide complete weather stripping system to reduce air infiltration. Weather stripping shall be replaceable.
         1) For angle mounted doors provide angle clip-on seal.
      c. Furnish door system with locks: Two Interior slide locks with dead bolt provided with hole to receive padlock provided by Owner.
      d. Provide leaf spring bumpers.
   8. SteelForm Limited Warranty: Raynor warrants the door sections against defects in material and workmanship, and deterioration due to rust-through for ten years from date of delivery to the original purchaser. Window components are warranted against defects in material and workmanship for one year from date of delivery to the original purchaser. Raynor warrants all hardware and spring components against defects in material and workmanship for one year (or cycle life of the springs) from date of delivery to the original purchaser. Additional Limited Warranty requirements in accordance with manufacturer's full standard limited warranty documentation.
   9. **Configuration Type: Vertical Lift Clearance: Track must provide 35" available headroom, which will maintain 14'-0" minimum clearance from finish floor to underside of lift equipment.**
   10. Follow manufacturer's instructions for installation. Support tracks are to be adequately reinforced with continuous angle attached to structure.

PART 2 EXECUTION

2.1 EXAMINATION
A. Do not begin installation until substrates have been properly prepared. Verify that site conditions are acceptable for installation of doors, operators, controls and accessories. Ensure that openings are square, flush and plumb.
B. If substrate preparation is the responsibility of another installer, notify Architect of unsatisfactory preparation before proceeding.

2.2 PREPARATION
A. Clean surfaces thoroughly prior to installation.
B. Prepare surfaces using the methods recommended by the manufacturer for achieving the best result for the substrate under the project conditions.

2.3 INSTALLATION
A. General: Install door, track and operating equipment complete with all necessary accessories and hardware according to shop drawings, manufacturer's instructions.
B. Lubricate bearings and sliding parts, and adjust doors for proper operation, balance, clearance and similar requirements.

2.4 PROTECTION
A. Clean installed products in accordance with manufacturer's instructions prior to Owner's acceptance. Remove and legally dispose of construction debris from project site.
B. Remove temporary coverings and protection of adjacent work areas. Repair or replace installed products damaged prior to or during installation.
C. Lubricate bearings and sliding parts, assure weather tight fit around door perimeter and adjust doors for proper operation, balance, clearance and similar requirements. Protect installed products until completion of project.
D. Touch-up, repair or replace damaged products before Substantial Completion.

Installation:
Install sectional doors according to manufacturers' written instructions.

Warranty:
Provide manufacturers' standard product warranty.

AHO ARCHITECTS
a sole proprietorship
www.ahoarch.com

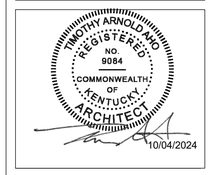

Express Oil Change & Tire Engineers
Single Building / Right Hand Oil Change / Front Enter / Side Tire Storage
Morehead, Kentucky

FINAL

No.	Description	Date

2024
© Aho Architects, a sole proprietorship
All Rights Reserved.

Architectural Specifications

Project number	24029
Date	10/04/2024
Drawn by	ARC
Checked by	N/A

G201

Scale 12" = 1'-0"

10/8/2024 3:54:17 PM

084113- Aluminum-Framed Entrances and Storefronts (Standard & Hurricane Non-Impact)

Manufacturers:

Basis-of-Design Product: Subject to compliance with requirements, provide products indicated below by YKK AP America Inc., or a comparable product by one of the following:

1. Kawneer
2. Or Approved equal

Products:

A. Exterior Storefront System

1. YES 45 TU
2. Center set.
3. Thermal Barrier: Provide continuous thermal barrier by means of a poured and debridged pocket consisting of a two part, chemically curing high density polyurethane which is bonded to the aluminum by YKK ThermaBond Plus.
4. Materials: Anodized Aluminum; 0.050" minimum thickness.
5. Accessories: As recommended by the manufacturer.
6. Components: Manufacturer's standard extruded aluminum mullions, entrance doors, framing, and indicated shapes, perimeter anchor fillers and steel reinforcing as required.
7. Glazing Stops: Manufacturer's standard glazing stops with EPDM glazing gaskets to prevent water infiltration at the exterior and Dow Corning 995 Structural Silicone Sealant with fixed stops at the interior. Color to match storefront.
8. Finish: See finish schedule.
9. Wind Load: See Structural for design pressures.
10. Door: 35D - Medium Stile
    a. Material: 0.050" aluminum min. thickness
    b. Finish: See finish schedule.
    c. Hardware: See Division 8 Door Hardware
    d. Accessories: Manufacturer's standard
    e. Glass: See Division 8 Glazing
    f. Glazing Stops: Manufacturer's standard
    g. Weather-stripping: Manufacturer's standard

B. Interior Storefront System

1. YES 45 FS
2. Center set.
3. Materials: Anodized Aluminum; 0.050" minimum thickness.
4. Accessories: As recommended by the manufacturer.
5. Finish: See finish schedule.

C. Storefront Glazing
1. Glazing: Comply with Division 08 "Glazing"
2. Glazing Gaskets: Manufacturer's standard sealed-corner pressure-glazing system of light gray resilient elastomeric glazing gaskets, setting blocks, and shims or spacers.
3. Glazing Sealants: As recommended by the manufacturer.

Installation:
Install aluminum-framed entrances and storefronts according to manufacturers' written instructions.

Warranty:
Provide manufacturers' standard product warranty.

087100- Door Hardware (Standard Single Bldg. w/ Side Tire Storage)

Manufacturers:

Basis-of-Design Product: Subject to compliance with requirements, provide products indicated below by the following manufacturers, or approved equal:

1. MK- McKinney
2. AD- Adams Rite
3. YA- Yale
4. RO-Rockwood
5. NO-Norton
6. PE- Pemko

General Notes:
1. Hardware listed for design criteria, confirm with specific door manufacturer.
2. Finishes for all door hardware are to be as indicated on Finish Schedule.

Hardware Sets:

Set: 1.0
Doors: 1
Description: EXT - ALUM

1	Continuous Hinge	MCK-25HD	MK
1	Deadlatch	4900 x 4591	AD
1	Cylinder	Mort / Cyl as required	YA
2	Pull	BF168	RO
1	Surface Closer	CLP8501	NO
1	Mtg Plate	as required	NO
1	Threshold	271A Pemkote MSES25SS	PE
1	Gasketing	by door / frame mfg	
1	Sweep	315CN	PE

Set: 2.0
Doors: 2, 3, 22, 23
Description: BAYS

4	Hinge	TA2714 4-1/2" x 4-1/2"	MK
1	Cylindrical Lock (classroom)	PB 5408LN	YA
1	Surface Closer	8501 Reg / PA	NO
1	Kick Plate	K1050 8" X 2" LDW 4BE CSK	RO
1	Door Stop	409 / 446 [as required]	RO
1	Gasketing	S773D	PE

Set: 3.0
Doors: 4
Description: WAITING - ALUM

1	Continuous Hinge	MCK-25HD	MK
2	Door Pull	BF168	RO
1	Surface Closer	8501 Reg / PA	NO
1	Door Stop	409 / 446 [as required]	RO
1	Gasketing	by door / frame mfg	

Set: 3.1
Doors: 9, 20, 21, 24
Description: EXT - BAYS

4	Hinge (heavy weight)	T4A3386 NRP 4-1/2" x 4-1/2"	MK
1	Exit Device (rim, nightlatch)	7150 WS PB627F	YA
1	Cylinder	Mort / Cyl as required	YA
1	Surface Closer	CLP8501	NO
1	Threshold	271A Pemkote MSES25SS	PE
1	Gasketing	S773D	PE
1	Rain Guard	346C x LAR	PE
1	Sweep	315CN	PE

Set 3.2
Door: 14
Description: Pit Ladder

4	Hinge (heavy weight)	T4A3386 NRP 4-1/2" x 4-1/2"	MK
1	Exit Device (rim, nightlatch)	7150 WS PB627F	YA
1	Cylinder	Mort / Cyl as required	YA
1	Surface Closer	CLP8501	NO

087100- Door Hardware (Standard Single Bldg. w/ Side Tire Storage)

Set: 4.0
Doors: 5
Description: TOILET

4	Hinge	TA2714 4-1/2" x 4-1/2"	MK
1	Cylindrical Lock (privacy)	PB 5402LN	YA
1	Mop Plate	K1050 4" X 1" LDW 4BE CSK	RO
1	Door Stop	409 / 446 [as required]	RO
1	Gasketing	S773D	PE
1	Surface Closer	8501 Reg / PA	NO

Set: 5.0
Doors: 13
Description: OFFICE

4	Hinge	TA2714 4-1/2" x 4-1/2"	MK
1	Cylindrical Lock (entry)	PB 5407LN	YA
1	Door Stop	409 / 446 [as required]	RO
1	Threshold	271A Pemkote MSES25SS	PE
1	Gasketing	S773D	PE
1	Sweep	315CN	PE
1	Surface Closer	8501 Reg / PA	NO

Set: 6.0
Doors: 15
Description: BREAK

4	Hinge	TA2714 4-1/2" x 4-1/2"	MK
1	Passage Set	PB 5401LN	YA
1	Surface Closer	8501 Reg / PA	NO
1	Mop Plate	K1050 4" X 1" LDW 4BE CSK	RO
1	Kick Plate	K1050 8" X 2" LDW 4BE CSK	RO
1	Door Stop	409 / 446 [as required]	RO
1	Gasketing	S773D	PE

Set: 7.0
Doors: 16
Description: SHOP TOILET

4	Hinge	TA2714 4-1/2" x 4-1/2"	MK
1	Cylindrical Lock (privacy)	PB 5402LN	YA
1	Mop Plate	K1050 4" X 1" LDW 4BE CSK	RO
1	Door Stop	409 / 446 [as required]	RO
1	Threshold	271A Pemkote MSES25SS	PE
1	Gasketing	S773D	PE
1	Sweep	315CN	PE
1	Surface Closer	8501 Reg / PA	NO

Set: 8.0
Doors: 6, 7, 8, 10, 11, 12, 17, 18, 19, 25, 26, 27
Description: OH DOOR

1	Hardware	By door mfg	

Installation:
Install door hardware according to manufacturers' written instructions.
All door hardware (Interior and Exterior) to be keyed alike.

Warranty:
Provide manufacturers' standard product warranty.

088000- Glazing (IGU) Standard and Hurricane Non-Impact

Manufacturers:

Basis-of-Design Product: Subject to compliance with requirements, provide products indicated below by Vitro, or a comparable product by one of the following:

1. Guardian Industries Corp.
2. Or Approved equal

Products:

Notes:
1.) All glazing to have proper labels as required by local AHJ and building codes.
2.) All glazing shall be reviewed and approved by the local distributor to meet the requirements for the region in which the glazing is being installed. Any issues with items specified shall be brought to the attention of the Architect prior to bid.

A. GL-1 Insulated Glass Unit
Double Glazed Clear Solar Control Insulating Glass Unit Solarban® 90 on Clear 6mm (2) | Air 1/2" (12.7mm) | Clear 6mm
1. Conformance: ASTM E 2190
2. Outdoor Lite: Clear Float Glass as manufactured by Vitro Architectural Glass
   a. Conformance: ASTM C 1036, Type 1, Class 1, Quality q3.
   b. Glass Thickness: 6mm (1/4")
   c. Magnetic Sputter Vacuum Deposition Coating (MSVD): ASTM C 1376.
   d. Coating: Solarban® 90 on Surface # 2
   e. Heat-Treatment: Tempered; ASTM C 1048, Kind FT; Safety Glazing meets ANSI Z97.1 and CPSC 16CFR-1201
3. Interspace Content: Air 1/2" (12.7mm)
4. Indoor Lite: Clear float glass as manufactured by Vitro Architectural Glass
   a. Conformance: ASTM C 1036, Type 1, Class 1, Quality q3.
   b. Heat-Treatment: Tempered; ASTM C 1048, Kind FT; Safety Glazing meets ANSI Z97.1 and CPSC 16CFR-1201
   c. Glass Thickness: 6mm (1/4")
5. Performance Requirements:
   a. Visible Light Transmittance: 51 percent minimum.
   b. Winter Nighttime U-Factor: 0.29 (Btu/hr*ft^{2}*°F) maximum.
   c. Summer daytime U-Factor: 0.27 (Btu/hr*ft^{2}*°F) maximum.
   d. Shading Coefficient: 0.27 maximum.
   e. Solar Heat Gain Coefficient: 0.23 maximum.
   f. Outdoor Visible Light Reflectance: 12 percent maximum.

B. GL-2 Monolithic Single-Glaze Float-Glass:
Monolithic Clear Glass Clear 6mm
1. Clear float glass as manufactured by Vitro Architectural Glass
   a. Conformance: ASTM C 1036, Type 1, Class 1, Quality q3.
   b. Heat-Treatment: Tempered; ASTM C 1048, Kind FT; Safety Glazing meets ANSI Z97.1 and CPSC 16CFR-1201
   c. Glass Thickness: 6mm (1/4")
2. Performance Requirements:
   a. Visible Light Transmittance: 89 percent minimum.
   b. Winter Nighttime U-Factor: 1.02 (Btu/hr*ft^{2}*°F) maximum.
   c. Summer daytime U-Factor: 0.92 (Btu/hr*ft^{2}*°F) maximum.
   d. Shading Coefficient: 0.94 maximum.
   e. Solar Heat Gain Coefficient: 0.82 maximum.
   f. Outdoor Visible Light Reflectance: 8 percent maximum.
   f. Outdoor Visible Light Reflectance: 16 percent maximum.

C. Glazing Installation
1. Install per manufacturers' standard written instructions.

D. Glazing warranty
1. Provide manufacturers' standard product warranty.

DIVISION 9 - FINISHES

092900- Gypsum Board

Manufacturers::

Basis-of-Design Product: Subject to compliance with requirements, provide products indicated below by Lafarge unless otherwise indicated, or a comparable product by one of the following:

1. Georgia-Pacific
2. USG
3. National Gypsum

Products:

A. Moisture and Mold-Resistant Type: Mold Defense
   1. Thickness: 1/2 inch
   2. Long Edges: Tapered
   3. Finish: Level 4 in areas exposed to view. Level 1 in concealed areas.
B. Water-resistant Type: Watercheck (@ Toilet Rooms and behind plumbing fixtures)
   1. Thickness: 1/2 inch
   2. Long Edges: Tapered
   3. Finish: Level 4
   4. Cuts: All cuts in board shall be covered with special waterproofing sealant as recommended by the manufacturer.
C. Type X: Firecheck (As Required)
   1. Thickness: 5/8"
   2. Long Edges: Tapered
   3. Finish: Level 4
   4. All penetrations and joints to be sealed with fire caulk as recommended by the manufacturer.

Installation:
Install gypsum board and accessories according to manufacturers' written instructions.

Warranty:
Provide manufacturers' standard product warranty.

095000- Acoustical Tile Ceiling

Manufacturer:

Basis-of-Design Product: Subject to compliance with requirements, provide products indicated below by Armstrong World Industries, Inc.

Products:
A. Acoustical Ceiling Panels

1. Style: 1775 Dune
2. Surface Texture: Fine Texture
3. Composition: Mineral Fiber
4. Color: White
5. Size: 24 inch x 24 inch
6. Edge Profile: Square Lay-in

B. Metal Suspension Systems

1. Suprafine XL 9/16" Exposed Tee Grid and Edge Molding
2. Wire for Hangers and Ties: ASTM A 641, Class 1 zinc coating, soft annealed, with a yield stress load of at least time three design load, but not less than 12 gauge.

Installation:
Install suspension system and panels in accordance with manufacturers' written instructions, and in compliance with ASTM C 636.

Warranty:
Provide manufacturers' standard product warranty.

096513- Resilient Base and Accessories

Manufacturers:

Basis-of-Design Product: Subject to compliance with requirements, provide products indicated below by Roppe, or a comparable product by one of the following:

1. Johnsonite, a Tarkett Company
2. Armstrong World Industries
3. Or Approved equal

Products:

A. Rubber Base: Pinnacle Rubber by Roppe
   1. Height: 4"
   2. Length: Coils in manufacturer's standard length
   3. Outside Corners: Job formed
   4. Inside Corners: Job formed
   5. Color as indicated on finish schedule.
B. Adhesives: As recommended by the manufacturer

Installation:
Install resilient base according to manufacturers' written instructions.

Warranty:
Provide manufacturers' standard product warranty.

099113- Exterior Painting

Manufacturer:

Basis-of-Design Product: Subject to compliance with requirements, provide products indicated below by Sherwin Williams.

Products:

A. Masonry: Pro Industrial Urethane Alkyd Enamel Gloss, B54-150 Series
B. Steel: Pro Industrial Urethane Alkyd Enamel Gloss, B54-150 Series
C. Wood: Pro Industrial Urethane Alkyd Enamel Gloss, B54-150 Series
D. Aluminum: Pro Industrial Urethane Alkyd Enamel Gloss, B54-150 Series

Note: Use 1 coat primer as recommended by manufacturer and 2 finish coats unless otherwise recommended by the manufacturer.

Installation:
Install exterior paint according to manufacturers' written instructions.

Warranty:
Provide manufacturers' standard product warranty.

099123- Interior Painting

Manufacturer:

Basis-of-Design Product: Subject to compliance with requirements, provide products indicated below by Sherwin Williams.

Products:

A. Masonry: Pro Industrial Pre-Catalyzed Water Based Epoxy Semi-Gloss, K46W151 Series
B. Steel: Pro Industrial Urethane Alkyd Enamel Gloss, B54-150 Series
C. Wood: Pro Industrial Urethane Alkyd Enamel Gloss, B54-150 Series
D. Gypsum Board in Office Area: ProMar 200 Zero VOC Interior Latex Egshel, B20W2600 Series. Use extreme bond primer at vinyl graphics.
E. Gypsum Board in Bay Area: ProMar 200 Zero VOC Interior Latex Egshel, B20W2600 Series. Use extreme bond primer at vinyl graphics.
F. Gypsum Board Ceilings: ProMar 200 Zero VOC Interior Latex Flat, B30W2650 Series
G. Sealed Concrete Floors: ArmorSeal Rexthane I Floor Coating + Shark Grip (1000 HS primer)

Note: Use 1 coat primer as recommended by manufacturer and 2 finish coats unless otherwise recommended by the manufacturer.

Installation:
Install interior paint according to manufacturers' written instructions.

Warranty:
Provide manufacturers' standard product warranty.

DIVISION 10 - SPECIALTIES

101419- Dimensional Letter Signage - By others.

101423.13 Room-Identification Signage

See drawing on A602.

102600 - Wall and Door Protection

Manufacturer:

Basis-of-Design Product: Subject to compliance with requirements, provide products indicated below by InPro Corporation:

Products:

A. Stainless Steel Flush Mount Corner Guards
B. Corner Radius:1/8"
C. Height: 4'-0"
D. Width: 1 1/2"
E. Materials: Stainless Steel: Type 430, 16 gauge
F. Attachment: Pre-drilled beveled holes and Phillips head screws.
G. Finish: Stainless Steel No. 4 satin finish.
H. Location: As indicated on drawings.
J. Installation: Install per manufacturer's standard written instructions.
K. Warranty: Provide manufacturers' standard product warranty.

102800- Toilet, Bath, and Laundry Accessories

The following list of accessories is essentially complete; however, the Contractor shall examine the drawings carefully and shall supply such items not specifically called for to provide a complete installation.

Manufacturers:

Basis-of-Design Product: Subject to compliance with requirements, provide products indicated below by Bradley Corporation or a comparable product by one of the following:

1. Bobrick Washroom Equipment, Inc.
2. American Specialties, Inc.
3. Or Approved Equal

Products:

A. Robe Hook: Bradley Model 915.
B. Grab Bars: Bradley Model 812-001-42, Model 812-001-36, and Model 812-001-24
C. Toilet Tissue Dispenser: Bradley Model 5425 **(By Others)**
D. Mirror: Bradley Model 780-2436
E. Soap Dispenser: Bradley Model 6563 **(By Others)**
F. Paper Towel Dispenser: Bradley Model 2494 **(By Others)**
G. Under Lavatory Guard: Truebro Lav Guard 2 by IPS Corporation
H. Baby Changing Station: Bradley Model 9631 (Light Gray)

Installation:

1. Install accessories according to manufacturers' written instructions, using fasteners appropriate to substrate indicated and recommended by unit manufacturer. Install units level, plumb, and firmly anchored in locations and heights indicated.

2. Install grab bars to withstand a downward load of at least 250 lbf, when tested according to ASTM F 446.

Warranty:
Provide manufacturers' standard product warranty.

104413- Fire Department Lock Box

Manufacturers:

Basis-of-Design Product: Subject to compliance with requirements, provide products indicated below by Knox, or a comparable product by one of the following:

1. Kidde
2. Or Approved Equal

Products:

A. Lock Box: 3200 Series Hinged Door Surface Mount
   i. Color: As indicated on Finish Schedule

Installation:
1. Install fire department lock box in location and height as required by the authorities having jurisdiction.
2. Install per manufacturer's written installation instructions.

Warranty:
Provide manufacturers' standard product warranty.

AHO ARCHITECTS
a sole proprietorship
www.ahoarch.com

TIMOTHY ARNOLD AHO
REGISTERED
NO. 9084
COMMONWEALTH OF KENTUCKY
ARCHITECT
10/04/2024

Express Oil Change & Tire Engineers

Single Building / Right Hand Oil Change / Front Enter / Side Tire Storage

Morehead, Kentucky

FINAL

No.	Description	Date

2024
© Aho Architects, a sole proprietorship
All Rights Reserved.

Architectural Specifications

Project number	24029
Date	10/04/2024
Drawn by	ARC
Checked by	N/A

G202

Scale 12" = 1'-0"

10/8/2024 3:54:17 PM

EXPRESS OIL CHANGE & TIRE ENGINEER STANDARDS - EXTERIOR

104416- Fire Extinguishers

Manufacturers:

Basis-of-Design Product: Subject to compliance with requirements, provide products indicated below by Amerex Corporation, or a comparable product by one of the following:

1. Larsens Manufacturing Company
2. JL Industries
3. Or Approved Equal

Products:

A. ABC Dry Chemical Extinguisher: Amerex Model B456
B. Wall Bracket: Amerex Model 0546 Wall
C. UL and ULC Rating: 4A-80BC

Installation:

1. Install fire extinguishers in locations and heights indicated and in compliance with requirements of authorities having jurisdiction.

2. Install fire extinguishers and brackets according to manufacturers' written instructions.

Warranty:
Provide manufacturers' standard product warranty.

DIVISION 12- FURNISHINGS

123623.13 Plastic-Laminate-Clad Countertops

Basis-of-Design Product: Subject to compliance with requirements, provide products indicated below by Wilsonart.

Products:

A. Plastic Laminate #1
   i. High pressure decorative laminate: NEMA LD3
   ii. Grade: HGS
   iii. Color: 4880-38 Carbon Mesh

B. Adhesives: as recommended by the manufacturer

Installation:
Install plastic laminate according to manufacturers' written instructions.

Warranty:
Provide manufacturers' standard product warranty.

DIVISION 31- EARTHWORK

313116- Termite Control

Provide EPA Registered termiticide acceptable to authorities having jurisdiction, in an aqueous solution formulated to prevent termite infestation.

DIVISION 33 - UTILITIES

334600- Subdrainage

Basis-of-Design Product: Subject to compliance with requirements, provide products indicated below by Carlisle.

Products:

A. CCW MiraDrain 6200 and 9800
B. CCW MiraStop
C. CCW MiraClay Woven Geotextile
D. CCW MiraClay Granules or Mastic

Installation:
Install subdrainage products according to manufacturers' written instructions.

PAINTED GRAY BRICK

Painted buildings include all of the same specs as the RED BRICK buildings except the red brick is painted Summit Gray. Downspouts are painted to match the background of the building.

If the building does not have a Peak, the blue stripe will go all the way around the building.

Must have a Gray, Black, or Blue Roof

4

EXTERIOR

AWNING

The new metal awning adds a nice modern, industrial look to the buildings and features built-in lighting for customers entering and exiting in late afternoons. Standard size is 12' for most buildings.

9

Awnings by General Contractor. See Details

BRANDED SCONCES

40"x28" aluminum sconces light up your building from top to bottom with a glowing logo in center.
E sconces are to be placed on oil change side. TE sconces are to be placed on mechanical side.
Sconces to to be evenly spaced between the bay doors, and vertically centered with the bay doors.

10

Branded Sconces by Others

CHANNEL LETTERS

While channel letters with 3" depth. Channel letter sizing is dictated by space and also may change due to the local sign regulations. In most cases, these letters are treated as directional signage. In most cases, sizes vary from 18" to 24".

FONT

Interstate Bold Coordensed - 50pt tracking

LETTERING FOR FRONT BUILDING

10 MINUTE OIL CHANGE
FULL SERVICE AUTO CARE
TIRE CENTER

LETTERING FOR BACK BUILDINGS

TIRES ALIGNMENT ROTATE & BALANCE
DIAGNOSTICS A/C BRAKES

8

Letters by Others

Note: Items shown on this page are EOC standards. See Finish Schedule for actual materials to be used on this project.

AHO ARCHITECTS
a sole proprietorship
www.ahoarch.com

TIMOTHY ARNOLD AHO
REGISTERED
NO. 9084
COMMONWEALTH OF KENTUCKY
ARCHITECT
10/04/2024

Express Oil Change & Tire Engineers
Single Building / Right Hand Oil Change / Front Enter / Side Tire Storage
Morehead, Kentucky

FINAL

No.	Description	Date

2024
© Aho Architects, a sole proprietorship
All Rights Reserved.

Architectural Specifications & EOC Standards - Exterior

Project number	24029
Date	10/04/2024
Drawn by	ARC
Checked by	N/A

G300

Scale 12" = 1'-0"

10/8/2024 3:54:22 PM

EXPRESS OIL CHANGE & TIRE ENGINEERS STANDARDS - INTERIOR

INTERIOR

INTERIOR PAINT

Adding two-toned blue walls to the interior creates a bold look that is consistent with EOC&TE branding. The vinyl graphics add an extra communication element.

13

IN-BAY MEDIA (OPTIONAL)

In-Bay Media relays all EOC&TE services to the customer with powerful animated, custom messages. The video is currently over 7 minutes long, allowing some messages to be viewed more than once.

14

In Bay Media by Others

LOBBY

PAINT SCHEME

Paint 3 color stripe on all walls, except the "Word Wall" if permitted. The "Word Wall" will be painted Summit Gray and the vinyl words will be applied to it. For the "Word Wall", choose a blank wall or a wall that has the most blank coverage for the vinyl.

Paint 3 color stripe on all walls, except the "Word Wall." The "Word Wall" will be painted Summit Gray and the vinyl words will be applied to it. For the "Word Wall", see note on enlarged plan A103 for wall location.

15

BRANDED POSTERS

The new posters deliver powerful messages, and include a new design of the EOC&TE mission statement. Each poster is 36" x 48". Order on www.expressoilprint.com

POSTER FRAMES, MAGAZINE AND ACE CARD HOLDERS

These frames and holders are made of aluminum to match the branding of EOC&TE.

16

Branded Posters by Others.

LOBBY

CHAIRS

There are two options for chairs. Global Lounge large chairs for larger spaces and Europa Guest Chairs for smaller spaces. These chairs are heavy duty and come with a warranty. The are both black leather with metal accent.

Global Lounge Chair - Large

Europa Guest Chair - Small

TILE

All tile must be replaced unless it is in good shape and is a gray color.
Replacement is Dal-Tile Heathland HL05 Ashland with 6" wall base and Dark Grout.

17

Furniture by Others

TABLES & LAPTOP STATION

These tables have a heavy duty laminate top with chrome accent legs to match the chairs. They are fully customizable, in shape and size, to fit your space. Typically we use these tables for laptop workstations and for coffee tables. If you do not have space for both, choose which one you would like to have (coffee or laptop station). We also place powerstrips on top of tables that screw on the back. These can be purchased at Home Depot or online (search Winsnoid Desktop Power Center or WSR320-S)

CHAIRS FOR LAPTOP WORKSTATION

Small, armless chairs with leather cushion seat.

Sonic Armless Chair

18

Furniture by Others

VINYL SCHEDULE

The vinyl is fully customizable as far as size and layout. Each location is different. It is best to send the vendor clear measurements of the lobby wall and of the bay walls so they can size appropriately. Please be aware of piping or shelving, or anything else that may be in the way. PLEASE ALLOW 1 WEEK FOR PAINT TO CURE BEFORE APPLYING VINYL.

Bay Area - Avery 700 Medium Gray and Rubber Duckie
Lobby Word Wall - Oracal 631 Gray 071

23

Wall Graphics by Others

PAINT SCHEDULE

BAY AREA

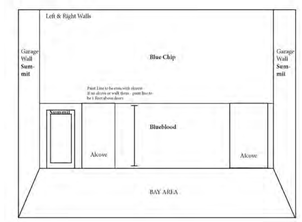

25

LOBBY

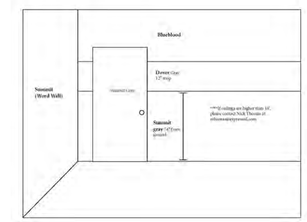

26

See Finish Schedule for Paint Selections

AHO ARCHITECTS
a sole proprietorship
www.ahoarch.com

TIMOTHY ARNOLD AHO
REGISTERED
NO. 9084
COMMONWEALTH OF KENTUCKY
ARCHITECT
10/04/2024

Express Oil Change & Tire Engineers
Single Building / Right Hand Oil Change / Front Enter / Side Tire Storage
Morehead, Kentucky

FINAL

No.	Description	Date

2024
© Aho Architects, a sole proprietorship
All Rights Reserved.

EOC Standards - Interior

Project number	24029
Date	10/04/2024
Drawn by	ARC
Checked by	N/A

G301

Scale 12" = 1'-0"

10/8/2024 3:54:27 PM

COMcheck Software Version COMcheckWeb
Envelope Compliance Certificate

Project Information

Energy Code:	2012 IECC
Project Title:	24029_EOC Morehead, KY
Location:	Morehead (Rowan), Kentucky
Climate Zone:	4a
Project Type:	New Construction
Vertical Glazing / Wall Area:	3%

Construction Site:
2230 Flemingsburg Road
Morehead, Kentucky 40351

Owner/Agent:
Express Oil Change & Tire Engineers
1880 Southpark Drive
Birmingham, Alabama 35244
tyler.hendon@expressoil.com

Designer/Contractor:
Aho Architects, a sole proprietorship
1855 Data Drive
Hoover, Alabama 35244
acain@ahoarch.com

Additional Efficiency Package(s)

Credits: 1.0 Required 1.0 Proposed
Reduced Lighting Power, 1.0 credit

Building Area	Floor Area
1-Automotive facility : Nonresidential	573

Envelope Assemblies

Assembly	Gross Area or Perimeter	Cavity R-Value	Cont. R-Value	Proposed U-Factor	Budget U-Factor(a)
Roof: Insulation Entirely Above Deck, [Bldg. Use 1 - Automotive facility]	573	---	25.0	0.039	0.039
Floor: Unheated Slab-On-Grade, Vertical 2 ft., [Bldg. Use 1 - Automotive facility] (c)	123	---	10.0	0.540	0.540
NORTH					
Ext. Wall: Wood-Framed, 16in. o.c., [Bldg. Use 1 - Automotive facility]	996	20.0	0.0	0.064	0.064
Door #3: Wood, Swinging, [Bldg. Use 1 - Automotive facility]	21	---	---	0.500	0.610
Door #16: Wood, Swinging, [Bldg. Use 1 - Automotive facility]	21	---	---	0.500	0.610
EAST					
Ext. Wall (Outermost): Wood-Framed, 16in. o.c., [Bldg. Use 1 - Automotive facility]	315	20.0	0.0	0.064	0.064
Ext. Wall (Innermost): Wood-Framed, 16in. o.c., [Bldg. Use 1 - Automotive facility]	315	20.0	0.0	0.064	0.064
Door #15: Wood, Swinging, [Bldg. Use 1 - Automotive facility]	21	---	---	0.500	0.610
SOUTH					
Ext. Wall: Wood-Framed, 16in. o.c., [Bldg. Use 1 - Automotive facility]	996	20.0	0.0	0.064	0.064
Door #2: Wood, Swinging, [Bldg. Use 1 - Automotive facility]	21	---	---	0.500	0.610
Door #13: Wood, Swinging, [Bldg. Use 1 - Automotive facility]	21	---	---	0.500	0.610
WEST					
Ext. Wall (Outermost): Wood-Framed, 16in. o.c., [Bldg. Use 1 - Automotive facility]	293	20.0	0.0	0.064	0.064
Door #1: Glass (over 50% glazing): Metal Frame, Entrance	21	---	---	0.290	0.770

Assembly	Gross Area or Perimeter	Cavity R-Value	Cont. R-Value	Proposed U-Factor	Budget U-Factor(a)
Door, Perf. Specs.: Product ID Solarban 90 on Clear, SHGC 0.23, PF 0.63, [Bldg. Use 1 - Automotive facility] (b)					
Window B: Metal Frame with Thermal Break: Fixed, Perf. Specs.: Product ID Solarban 90 on Clear, SHGC 0.23, PF 0.63, [Bldg. Use 1 - Automotive facility] (b)	85	---	---	0.290	0.380
Ext. Wall (Innermost): Wood-Framed, 16in. o.c., [Bldg. Use 1 - Automotive facility]	315	20.0	0.0	0.064	0.064

(a) Budget U-factors are used for software baseline calculations ONLY, and are not code requirements.
(b) Fenestration product performance must be certified in accordance with NFRC and requires supporting documentation.
(c) Slab-On-Grade proposed and budget U-factors shown in table are F-factors.

Envelope PASSES: Design 1% better than code

Envelope Compliance Statement

Compliance Statement: The proposed envelope design represented in this document is consistent with the building plans, specifications, and other calculations submitted with this permit application. The proposed envelope systems have been designed to meet the 2012 IECC requirements in COMcheck Version COMcheckWeb and to comply with any applicable mandatory requirements listed in the Inspection Checklist.

April R. Cain, Reg. Interior Designer — Name - Title — Signature — 10/04/2024 Date

COMcheck Software Version COMcheckWeb
Inspection Checklist

Energy Code: 2012 IECC

Requirements: 0.0% were addressed directly in the COMcheck software

Text in the "Comments/Assumptions" column is provided by the user in the COMcheck Requirements screen. For each requirement, the user certifies that a code requirement will be met and how that is documented, or that an exception is being claimed. Where compliance is itemized in a separate table, a reference to that table is provided.

Section # & Req.ID	Plan Review	Complies?	Comments/Assumptions
C103.2 [PR1]¹	Plans and/or specifications provide all information with which compliance can be determined for the building envelope and document where exceptions to the standard are claimed.	☐Complies ☐Does Not ☐Not Observable ☐Not Applicable	
C406 [PR9]¹	Plans, specifications, and/or calculations provide all information with which compliance can be determined for the additional energy efficiency package options.	☐Complies ☐Does Not ☐Not Observable ☐Not Applicable	
C402.3.1 [PR10]¹	The vertical fenestration area <= 30 percent of the gross above-grade wall area.	☐Complies ☐Does Not ☐Not Observable ☐Not Applicable	
C402.3.1 [PR11]¹	The skylight area <= 3 percent of the gross roof area.	☐Complies ☐Does Not ☐Not Observable ☐Not Applicable	
C402.3.2 [PR14]¹	In enclosed spaces > 10,000 ft2 directly under a roof with ceiling heights >15 ft. and used as an office, lobby, atrium, concourse, corridor, storage, gymnasium/exercise center, convention center, automotive service, manufacturing, non-refrigerated warehouse, retail store, distribution/sorting area, transportation, or workshop, the following requirements apply: (a) the daylight zone under skylights is >= half the floor area; (b) the skylight area to daylight zone is >= 3 percent with a skylight VT >= 0.40; or a minimum skylight effective aperture >= 1 percent.	☐Complies ☐Does Not ☐Not Observable ☐Not Applicable	
C402.3.2.2 [PR15]¹	Skylights in office, storage, automotive service, manufacturing, non-refrigerated warehouse, retail store, and distribution/sorting area have a measured haze value > 90 percent unless designed to exclude direct sunlight.	☐Complies ☐Does Not ☐Not Observable ☐Not Applicable	

Additional Comments/Assumptions:

1 High Impact (Tier 1) 2 Medium Impact (Tier 2) 3 Low Impact (Tier 3)

Section # & Req.ID	Footing / Foundation Inspection	Complies?	Comments/Assumptions
C104 [FO3]¹	Installed slab-on-grade insulation type and R-value consistent with insulation specifications reported in plans and COMcheck reports.	☐Complies ☐Does Not ☐Not Observable ☐Not Applicable	*See the Envelope Assemblies table for values.*
C303.2 [FO4]¹	Slab edge insulation installed per manufacturer's instructions.	☐Complies ☐Does Not ☐Not Observable ☐Not Applicable	
C402.2.6 [FO5]¹	Slab edge insulation depth/length. Slab insulation extending away from building is covered by pavement or >= 10 inches of soil.	☐Complies ☐Does Not ☐Not Observable ☐Not Applicable	*See the Envelope Assemblies table for values.*
C403.2.8.1 [FO6]¹	Exterior insulation protected against damage, sunlight, moisture, wind, landscaping and equipment maintenance activities.	☐Complies ☐Does Not ☐Not Observable ☐Not Applicable	
C402.2.8 [FO12]¹	Bottom surface of floor structures incorporating radiant heating insulated to >=R-3.5.	☐Complies ☐Does Not ☐Not Observable ☐Not Applicable	*See the Envelope Assemblies table for values.*

Additional Comments/Assumptions:

1 High Impact (Tier 1) 2 Medium Impact (Tier 2) 3 Low Impact (Tier 3)

Section # & Req.ID	Framing / Rough-in Inspection	Complies?	Comments/Assumptions
C402.4.1, C402.4.2 [FR16]¹	The building envelope contains a continuous air barrier that is sealed in an approved manner and either constructed or tested in an approved manner. Air barrier penetrations are sealed in an approved manner.	☐Complies ☐Does Not ☐Not Observable ☐Not Applicable	
C402.4.3, C402.4.4 [FR18]¹	Factory-built fenestration and doors are labeled as meeting air leakage requirements.	☐Complies ☐Does Not ☐Not Observable ☐Not Applicable	
C402.4.7 [FR17]¹	Vestibules are installed on all building entrances. Doors have self-closing devices.	☐Complies ☐Does Not ☐Not Observable ☐Not Applicable	
C402.3.2, C402.3.4 [FR8]¹	Vertical fenestration U-Factor.	☐Complies ☐Does Not ☐Not Observable ☐Not Applicable	*See the Envelope Assemblies table for values.*
C402.3.3 [FR10]¹	Vertical fenestration SHGC value.	☐Complies ☐Does Not ☐Not Observable ☐Not Applicable	*See the Envelope Assemblies table for values.*
C303.1.3 [FR12]¹	Fenestration products rated in accordance with NFRC.	☐Complies ☐Does Not ☐Not Observable ☐Not Applicable	
C303.1.3 [FR13]¹	Fenestration products are certified as to performance labels or certificates provided.	☐Complies ☐Does Not ☐Not Observable ☐Not Applicable	

Additional Comments/Assumptions:

1 High Impact (Tier 1) 2 Medium Impact (Tier 2) 3 Low Impact (Tier 3)

Section # & Req.ID	Mechanical Rough-in Inspection	Complies?	Comments/Assumptions
C402.4.5.1 [ME3]¹	Stair and elevator shaft vents have motorized dampers that automatically close.	☐Complies ☐Does Not ☐Not Observable ☐Not Applicable	
C402.4.5.2 [ME5R]¹	Outdoor air and exhaust systems have motorized dampers that automatically shut when not in use and meet maximum leakage rates. Check gravity dampers where allowed.	☐Complies ☐Does Not ☐Not Observable ☐Not Applicable	

Additional Comments/Assumptions:

1 High Impact (Tier 1) 2 Medium Impact (Tier 2) 3 Low Impact (Tier 3)

Section # & Req.ID	Insulation Inspection	Complies?	Comments/Assumptions
C402.4.1.1 [IN1]¹	All sources of air leakage in the building thermal envelope are sealed, caulked, gasketed, weather stripped or wrapped with moisture vapor-permeable wrapping material to minimize air leakage.	☐Complies ☐Does Not ☐Not Observable ☐Not Applicable	
C402.4.2.1 [IN2]¹	Roof R-value. For some ceiling systems, verification may need to occur during Framing inspection.	☐Complies ☐Does Not ☐Not Observable ☐Not Applicable	*See the Envelope Assemblies table for values.*
C303.2 [IN3]¹	Roof insulation installed per manufacturer's instructions. Blown or poured loose-fill insulation is installed only where the roof slope is <=3 in 12.	☐Complies ☐Does Not ☐Not Observable ☐Not Applicable	
C303.2 [IN7]¹	Above-grade wall insulation installed per manufacturer's instructions.	☐Complies ☐Does Not ☐Not Observable ☐Not Applicable	
C104 [IN8]¹	Installed floor insulation type and R-value consistent with insulation specifications reported in plans and COMcheck reports.	☐Complies ☐Does Not ☐Not Observable ☐Not Applicable	*See the Envelope Assemblies table for values.*
C303.1 [IN10]¹	Building envelope insulation is labeled with R-value or insulation certificate providing R-value and other relevant data.	☐Complies ☐Does Not ☐Not Observable ☐Not Applicable	
C303.2.1 [IN14]¹	Exterior insulation is protected from damage with a protective material. Verification for exposed foundation insulation may need to occur during Foundation Inspection.	☐Complies ☐Does Not ☐Not Observable ☐Not Applicable	

Additional Comments/Assumptions:

1 High Impact (Tier 1) 2 Medium Impact (Tier 2) 3 Low Impact (Tier 3)

Section # & Req.ID	Final Inspection	Complies?	Comments/Assumptions
C402.4.6 [FI37]¹	Weatherseals installed on all loading dock cargo doors.	☐Complies ☐Does Not ☐Not Observable ☐Not Applicable	
C402.4.8 [FI26]¹	Recessed luminaires in thermal envelope to limit infiltration and be IC rated and labeled. Seal between interior finish and luminaire housing.	☐Complies ☐Does Not ☐Not Observable ☐Not Applicable	

Additional Comments/Assumptions:

1 High Impact (Tier 1) 2 Medium Impact (Tier 2) 3 Low Impact (Tier 3)

AHO ARCHITECTS
a sole proprietorship
www.ahoarch.com

TIMOTHY ARNOLD AHO
REGISTERED
NO. 9084
COMMONWEALTH OF KENTUCKY
ARCHITECT
10/04/2024

Express Oil Change & Tire Engineers
Single Building / Right Hand Oil Change / Front Enter / Side Tire Storage
Morehead, Kentucky

FINAL

No.	Description	Date

2024
© Aho Architects, a sole proprietorship
All Rights Reserved.

Building COMCheck

Project number	24029
Date	10/04/2024
Drawn by	ARC
Checked by	N/A

G400

Scale

10/8/2024 3:55:09 PM

1 General Information

PROJECT INFORMATION

Name of Project:	Single Building / Right Hand Oil Change/ Front Enter/ Side Tire Storage		
Client:	Express Oil Change & Tire Engineers		
Location:	Morehead, KY		
Authority Having Jurisdiction (AHJ):	City: Morehead	County: N/A	State: N/A
Square Footage / Stories / Height:	Main Level G.S.F. = 5,662 Pit Level G.S.F. = 1,381 Total G.S.F. = 7,043	Stories = 1 + Pit	Height = 24' - 2 3/4"

PROJECT TYPE

- ■ New Construction
- ☐ Addition
- ☐ Other
- ☐ Alteration
- ☐ Change of Occupancy

BUILDING USE

- ☐ Single Use
- ☐ Mixed Use (Separated)
- ■ Mixed Use (Non-Separated)
- ■ Description: Automotive repair garage used for general service on automobiles.

SPRINKLERED

- ☐ Yes
- ☐ Partial
- ■ No

2 Codes

- ■ 2018 Kentucky Building Code (2015 IBC Code with Kentucky Amendments)
- ■ 2012 International Energy Conservation Code
- ■ 2015 International Fire Code
- ■ 2012 NFPA 54 Fuel Gas Code
- ■ 2015 International Mechanical Code
- ■ Kentucky State Plumbing Law
- ■ 2009 ICC / ANSI A117.1
- ■ 2017 NFPA 70 National Electrical Code

3 Use and Occupancy Classification(s) (2018 Kentucky Building Code)

- ☐ Assembly Group A-1
- ☐ Assembly Group A-2
- ☐ Assembly Group A-3
- ☐ Assembly Group A-4
- ☐ Assembly Group A-5
- ■ Business Group B
- ☐ Educational Group E
- ☐ Factory Group F-1
- ☐ Factory Group F-2
- ☐ High-Hazard Group H-1
- ☐ High-Hazard Group H-2
- ☐ High-Hazard Group H-3
- ☐ High-Hazard Group H-4
- ☐ High-Hazard Group H-5
- ☐ Institutional Group I-1
- ☐ Institutional Group I-2
- ☐ Institutional Group I-3
- ☐ Institutional Group I-4
- ☐ Mercantile Group M
- ☐ Residential Group R-1
- ☐ Residential Group R-2
- ☐ Residential Group R-3
- ☐ Residential Group R-4
- ■ Storage Group S-1
- ☐ Storage Group S-2
- ☐ Utility & Misc Group U

4 Special Detailed Requirements Based On Use and Occupancy (2018 Kentucky Building Code)

406.8 Repair Garages

- ■ Project complies with 406.8 through 406.8.3

413 Combustible Storage

413.1 High-piled storage of combustible materials over 12'-0" or high-hazard commodities over 6'-0"

- ■ Yes
- ☐ No

413.2 Storage of combustible materials in attics, under-floor, and concealed spaces

- ☐ Yes
- ■ No

414 Hazardous Materials

- ■ Project complies with 414.2.1 through 414.2.5 (IFC)Control Areas
- ■ Number of Control Areas Provided: Entire Building is one control area

Location
- ■ Inside
- ☐ Outside

Use
- ■ Open
- ☐ Closed
- ■ Storage Only

Types of Hazardous Materials (Table 307.1.(1) of IBC and 3206.2 of IFC)

- ■ Class IIIB Liquids — ■ Actual Storage per control area: 4040.13 gallons
- ■ Class IA Flammable Liquids — ■ Actual Storage per control area: 0.94 gallons
- ■ Class IB Flammable Liquids — ■ Actual Storage per control area: 3.25 gallons
- ■ High-Hazard Commodities per IFC 2018 3203.6 / 3206.2 (Rubber Tires)
- ■ Allowable Quantity: 0-500 s.f. — ■ Actual Quantity: X≤500 s.f.

5 General Building Heights and Areas (2018 Kentucky Building Code)

504 Building Height and Areas and 506 Building Area (Per Table 504.3, 504.4, and 506.2)

- ☐ Allowable Building Height = 40'-0"
- ☐ Allowable Number of Stories Above Grade Plane = 1
- ☐ Allowable Area Factor = 9,000 s.f.
- ■ Actual Building Height = 24' - 2 3/4"
- ■ Actual Number of Stories Above Grade Plane = 1
- ■ Actual Area = 7043 s.f. (5662 Main Level + 1381 Pit)

505.3 Equipment Platforms

- ■ Project complies with 505.3 through 505.3.3

508 Mixed Use and Occupancy

- ☐ Mixed Use Occupancy (Separated)
- ■ Mixed Use Occupancy (Non-Separated)
- ☐ Does not apply

No separation required between Group B and Group S-1 Occupancies

6 Types of Construction (2018 IBC)

601 General and 602 Construction Classification

- ☐ Type IA
- ☐ Type IB
- ☐ Type IIA
- ☐ Type IIB
- ☐ Type IIIA
- ☐ Type IIIB
- ☐ Type IV
- ☐ Type VA
- ■ Type VB

Table 601 Fire Resistance Rating Requirements for Building Elements

Building Elements	Hours Required	Hours Provided
Primary Structural Frame	0	0
Bearing Walls (Exterior)	0	0
Bearing Walls (Interior)	0	N/A
Nonbearing Walls & Partitions (Exterior)	0	0
Nonbearing Walls & Partitions (Interior)	0	0
Floor Construction & Associated Secondary Members	0	0
Roof Construction & Associated Secondary Members	0	0

Table 602 Fire Resistance Requirements for Exterior Walls Based on Fire Separation Distance

Fire Separation Distance	Rear (South)	Right (West)	Front (North	Left (East)
X < 5				
5 ≤ X < 10				6'-3"
10 ≤ X < 30				
X ≥ 30	>30'	>30'	>30'	

X≥30' for Group B and S-1 = 0 hours

10≤X<30' for Group B and S-1 = 0 hours

5≤X<10' for Group B and S-1 = 1 hours

* Fire separation distancce based on Code Section 705.3

8 Interior Finishes (2018 Kentucky Building Code)

Table 803.11 Interior Wall and Ceiling Finish Requirements by Occupancy

Group	Exit Enclosures and Exit Passageways	Corridors	Rooms and Enclosed Spaces
S-1	B	B	C
B	A	B	C

804.4.2 Minimum Critical Radiant Flux

- ☐ Class I
- ■ Class II

9 Fire Protection Systems (2018 Kentucky Building Code)

903 Automatic Sprinkler Systems

903.2.9.1 Repair Garages

- ☐ Yes
- ☐ Partial
- ■ Not Required

906 Portable Fire Extinguishers

- ■ Yes
- ☐ No
- ■ Project complies with 906.1 through 906.10
- ■ Project complies NFPA 10

907 Fire Alarm and Detection System

- ☐ Yes
- ■ Not Required

10 Means of Egress (2018 Kentucky Building Code)

DT_2018 KBC Sections 1005.3.1 & 1005.3.2 Egress width Stairways and Other Egress Components (Group S-1)

Occupancy Classification	Name	Number	No. of Occupants	Egress - Stairways	Required Stairway Width	Other Egress Components	Required Capacity in Inches
S-1	Oil Change	5	6.36			0.2	1.27
S-1	Corridor	6	0.58			0.2	0.12
S-1	Service	9	12.42			0.2	2.48
S-1	Storage	10	0.63			0.2	0.13
S-1	Pit	11	6.23	0.3	1.87	0	0.00
S-1	Storage	12	0.86			0.2	0.17
S-1	Storage	13	1.67			0.2	0.33
Subtotal			28.74		1.87		4.50

DT_2018 KBC Table 1005.3.2 Egress width Other Egress Components (Group B)

Occupancy Classification	Name	Number	No. of Occupants	Other Egress Components	Required Capacity in Inches
B	Service Writing	1	1.40	0.2	0.28
B	Waiting Room	2	1.26	0.2	0.25
B	Toilet	3	0.43	0.2	0.09
B	Manager	4	0.51	0.2	0.10
B	Break Room	7	0.61	0.2	0.12
B	Toilet	8	0.45	0.2	0.09
Subtotal			4.67		0.93

Tables 1006.2.1 Spaces with One Exit or Exit Access Doorway

Occupancy	Max Occupant Load	Max Occupant Load Provided	Number of Exits Required	Number of Exits Provided	Max. Common Path of Travel Allowable (Nonsprinkled)	Max. Provided Common Path of Travel (Nonsprinkled)
S-1	29	28.74	1	4	100'-0"	≤ 100' -0"
B	49	4.76	1	1	100'-0"	≤ 100' -0"

Table 1006.3.1 Minimum Number of Exits or Access to Exits Per Story

Occupant Load Per Story	Minimum Number of Exits or Access to Exits from Story	Number of Exits or Access to Exits from Story Provided
1-500	2	5

Table 1017.2 Exit Access Travel Distance

Occupancy	Without Sprinkler System (Feet)	With Sprinkler System	Max Travel Distance Provided (Feet)
S-1	200	N/A	71'-1"
B	200	N/A	84'-10"

10 Means of Egress (2018 Kentucky Building Code)

DT_2018 KBC Table 1004.1.2 Maximum Floor Area Allowance Per Occupant (Group S-1)

Occupancy Classification	Name	Number	Area	S.F. Per Occupants	No. of Occupants
S-1	Oil Change	5	1271 SF	200	6.36
S-1	Corridor	6	115 SF	200	0.58
S-1	Service	9	2483 SF	200	12.42
S-1	Storage	10	188 SF	300	0.63
S-1	Pit	11	1247 SF	200	6.23
S-1	Storage	12	258 SF	300	0.86
S-1	Storage	13	500 SF	300	1.67
Subtotal			6063 SF		28.74

Please note: For the above calculations the occupant load factor used is 200 gross square feet occupant factor for Group H-5 Fabrication and Manufacturing Areas, as there is not an occupant factor for repair garages.

DT_2018 KBC Table 1004.1.2 Maximum Floor Area Allowance Per Occupant (Group B)

Occupancy Classification	Name	Number	Area	S.F. Per Occupants	No. of Occupants
B	Service Writing	1	140 SF	100	1.40
B	Waiting Room	2	126 SF	100	1.26
B	Toilet	3	43 SF	100	0.43
B	Manager	4	51 SF	100	0.51
B	Break Room	7	61 SF	100	0.61
B	Toilet	8	45 SF	100	0.45
Subtotal			467 SF		4.67

12 Interior Environment (2018 Kentucky Building Code)

1208.1 Minimum Room Widths

Habitable spaces are not less than 7 feet in any plan dimension

- ■ Yes
- ☐ No

1208.2 Minimum Ceiling Heights

Occupiable spaces, habitable spaces, and corridors have a ceiling height of not less than 7 feet 6 inches. Bathrooms, toilet rooms, kitchens, storage rooms, and laundry rooms have a ceiling height of not less than 7 feet.

- ■ Yes
- ☐ No

1209.2 Attic spaces

Opening not less than 20 inches by 30 inches is provided for attic area with clear height over 30 inches. 30" headroom provided at or above access opening

- ■ Yes
- ☐ Not Required

AHO ARCHITECTS
a sole proprietorship
www.ahoarch.com

TIMOTHY ARNOLD AHO REGISTERED NO. 9084 COMMONWEALTH OF KENTUCKY ARCHITECT

10/04/2024

Express Oil Change & Tire Engineers

Single Building / Right Hand Oil Change / Front Enter / Side Tire Storage

Morehead, Kentucky

FINAL

No.	Description	Date

2024
© Aho Architects, a sole proprietorship
All Rights Reserved.

Life Safety / Code Summary

Project number	24029
Date	10/04/2024
Drawn by	ARC
Checked by	N/A

LS100

Scale 12" = 1'-0"

10/8/2024 3:55:10 PM

29 Plumbing Systems (2018 Kentucky Building Code)

Table 2902.1 Minimum Number of Required Plumbing Fixtures

DT_Plumbing Fixture_Group S-1												
Total Occupant Load	Male	Female	Required Water Closets		Water Closets Provided	Required Lavatories		Lavatories Provided	Required Drinking Fountains	Drinking Fountains Provided	Required Service Sinks	Service Sinks Provided
			Male	Female		Male	Female					
28.74	14.37	14.37	0.14	0.14	1	0.14	0.14	1	0.03	1	1	1

DT_Plumbing Fixture_Group B												
Total Occupant Load	Male	Female	Required Water Closets		Water Closets Provided	Required Lavatories		Lavatories Provided	Required Drinking Fountains	Drinking Fountains Provided	Required Service Sinks	Service Sinks Provided
			Male	Female		Male	Female					
4.67	2.335	2.335	0.09	0.09	1	0.06	0.06	1	0.05	1	1	1

2902.2 Separate Facilities

Separate facilities provided for each sex

☐ Yes ■ Not Required per 2902.2 Exception 2

2902.2.1 Family or assisted use toilet facilities serving as separate facilities

■ Yes ☐ No ☐ Not Required

2902.3 Employee and public toilet facilities

■ Employee toilet combined with public toilet facilities

2902.3.1 Access

Route to public toilet facilities does not pass through kitchens, storage rooms, or closets and is accessible.

■ Yes ☐ No

2902.3.2 Location of toilet facilities in occupancies other than covered mall buildings

Located not more than one story above or below the space required to be provided with toilet facilities

■ Yes ☐ No

Path of travel to such facilities does not exceed 500 feet

■ Yes ☐ No

2902.4 Signage

■ Yes ☐ No

Legible sign designating the sex provided in visible location near entrance to toilet facility

☐ Yes ■ Not Required per 2902.2.1

Plumbing Fixture Notes:
(1) High/Low drinking fountain provided for the entire building.
(1) Service Sink provided for the entire building.
(2) Family Assisted-Use Toilet Rooms serving as separate facilities each containing (1) lavatory and (1) water closet provided for the entire building.

5 Fire Service Features (2015 IFC with Kentucky Amendments)

505.1 Address Identification

■ Yes ☐ No ☐ Not Required

■ Project complies 505.1 Address Identification

506 Key Boxes

■ Yes ☐ No ☐ Not Required

■ Project complies 506.1 Where Required

23 Motor Fuel-Dispensing Facilities and Repair Garages (2015 IFC with Kentucky Amendments)

2311.2.2 Waste oil, motor oil and other Class IIIB Liquids

■ Project complies with 2311.2.2 Waste oil, motor oil and other Class IIIB liquids.

2311.2.2.1 Tank Location

■ Project complies with 2311.2.2.1 tank location ☐

2311.2.3 Drainage and disposal of liquid and oil-soaked waste

☐ Yes ☐ No ■ Not Required

■ Garage floors do not contain floor drains.

2311.4 Below-grade areas

■ Project complies with 2311.4.1 through 2311.4.3 ☐

2311.6 Fire Extinguishers

■ Project complies with 2311.6 fire extinguishers (See Section 9 Fire Protection Systems)

32 High Piled Combustible Storage (2015 IFC with Kentucky Amendments)

3203.6 High-hazard commodities

■ Yes ☐ No

■ Project does contain high-hazard commodities (Rubber Tires)

Definitions per Chapter 2 of the International Fire Code

High-piled Combustible Storage. Storage of combustible materials in closely packed piles or combustible materials on pallets, in racks or on shelves where the top of storage is greater than 12'-0" in height. When required by the fire code official, high-piled combustible storage also includes certain high-hazard commodities, such as rubber tires, Group A plastics, flammable liquids, idle pallets, and similar commodities, where the top of storage is greater than 6'-0" in height.

■ Project does contain high piled combustible storage over 6'-0" (<500 s.f. of rubber tire storage over 6 feet high).

Table 3206.2 General Fire Protection and Life Safety Requirements

Commodity Class	Size of High Piled Storage Area	All Storage Areas			
		Automatic Fire Extinguishing System	Fire Detection System	Building Access	Smoke and Heat Removal
High Hazard	0-500 s.f.	Not Required	Not Required	Not Required	Not Required

Solid-Piled Storage, Shelf Storage and Palletized Storage			
Max. Pile Dimension (Feet)	Max. Permissible Storage Height (Feet)	Max. Pile Volume (Cubic Feet)	
50 feet	Not Required	Not Required	

34 Tire Rebuilding and Tire Storage (2015 IFC with Kentucky Amendments)

3409 Indoor Storage Arrangement

■ Project complies with 3409.1 Pile Dimensions

■ Pile dimension less than 50'-0" in direction of wheel hole.

■ Tires stored adjacent to or along one wall shall not extend more than 25'-0" from that wall.

50 Hazardous Materials - General Provisions (2015 IFC with Kentucky Amendments)

Table 5003.1.1 (1) Maximum Allowable Quantity Per Control Area of Hazardous Materials Posing a Physical Hazard

■ Project complies with Table 5003.1.1 (1).

■ Project contains Class IIIB Liquid Storage that does not exceed 13,200 liquid gallons per control area.

■ Project contains Class IIIB Liquid Open-System that does not exceed 3,300 liquid gallons per control area.

■ Project contains Flammable Liquid IA Storage that does not exceed 30 liquid gallons per control area.

■ Project contains Flammable Liquid IA Open System that does not exceed 10 liquid gallons per control area.

■ Project contains Flammable Liquid IB Storage that does not exceed 120 liquid gallons per control area.

■ Project contains Flammable Liquid IB Open System that does not exceed 30 liquid gallons per control area.

■ Project complies 5003.8.3.1 through 5003.8.3.4

■ Entire building is one single control area.

57 Flammable and Combustible Liquids (2015 IFC with Kentucky Amendments)

5703.2 Fire Protection

■ Project complies with 5703.2.1 portable fire extinguishers an hose lines. (See Section 9 Fire Protection Systems).

5703.4 Spill Control and Secondary Containment

■ Not required. Project does not exceed maximum allowable quantity per control area.

■ Though not required, the pit itself acts as a secondary containment. There are no drains in the pit.

AHO ARCHITECTS
a sole proprietorship
www.ahoarch.com

TIMOTHY ARNOLD AHO
REGISTERED
NO. 9084
COMMONWEALTH OF KENTUCKY
ARCHITECT
10/04/2024

Express Oil Change & Tire Engineers

Single Building / Right Hand Oil Change / Front Enter / Side Tire Storage

Morehead, Kentucky

FINAL

No.	Description	Date

2024
© Aho Architects, a sole proprietorship
All Rights Reserved.

Life Safety / Code Summary

Project number	24029
Date	10/04/2024
Drawn by	ARC
Checked by	N/A

LS101

Scale 12" = 1'-0"

10/8/2024 3:55:11 PM

LIFE SAFETY SYMBOL LEGEND

- Exit Sign
- HC EXIT 32" — Handicap Accessible Egress Width
- 32" — Exit from room (# = minimum clear width in inches)
- Maneuvering clearances at manual swinging doors
- # — Travel Distance
- 1 Hour Rated

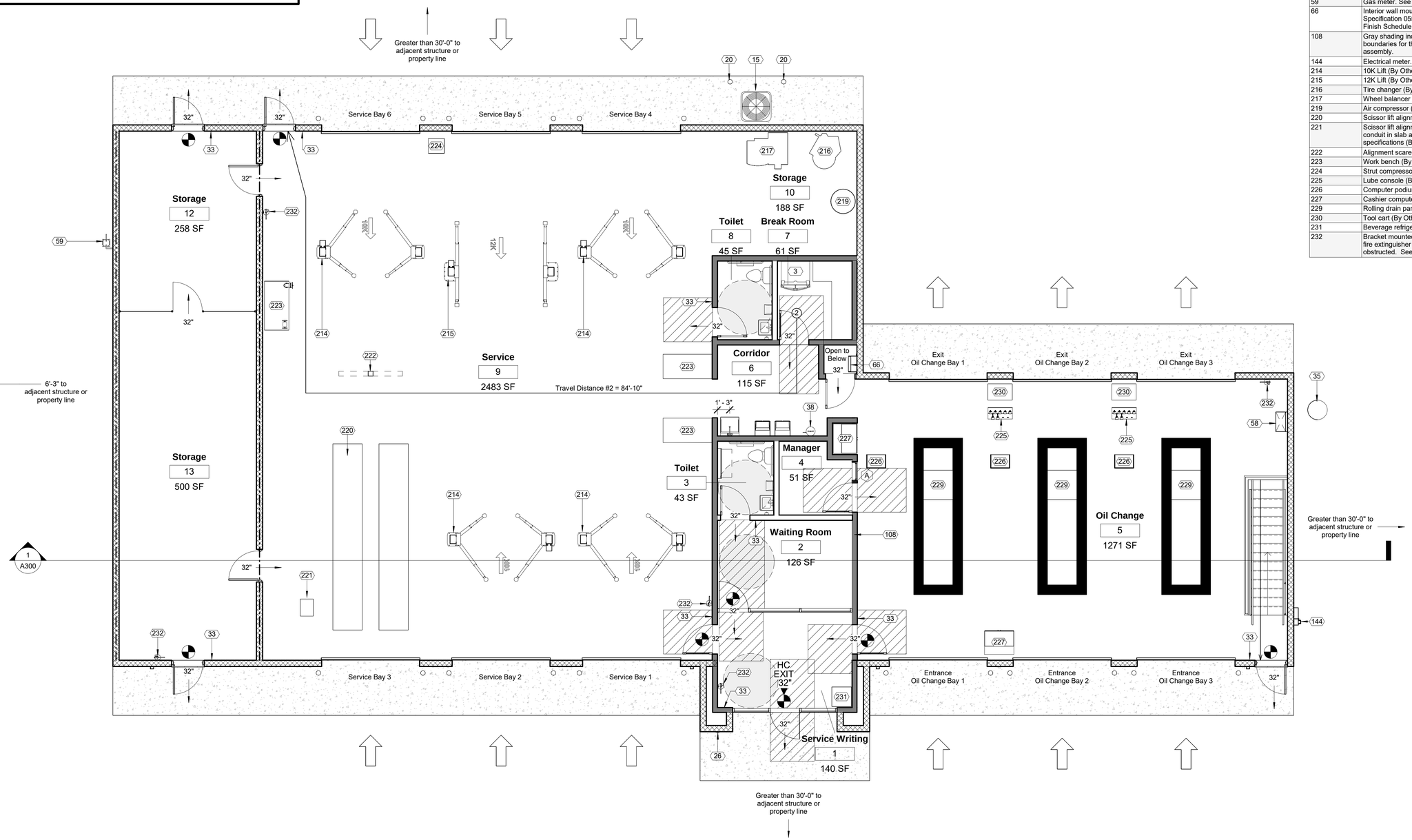

1 05_Life Safety Plan_Main
3/16" = 1'-0"

Keynote Schedule

Tag	Text
3	Location of 30" wide refrigerator (By Others).
15	HVAC condensing unit. See Mechanical.
20	4" diameter painted concrete-filled steel pipe bollard. Color as indicated on Finish Schedule. Paint embedded portion of bollard. Use primer and two finish coats. See Details. See Specification 055000 Metal Fabrications.
26	Fire Department Lock Box. Locate as directed by the Local Fire Marshal or AHJ. See Specification 104413 Fire Department Lock Box.
33	ADA compliant room / exit sign. See Details.
35	Submersible foundation sump pump. Provide Zoeller M98 or comparable product. Coordinate location with Civil and tie into Civil's storm drainage system.
38	Eyewash station. See Plumbing.
58	Verify location and size of pit exhaust opening with Structural and Mechanical drawings.
59	Gas meter. See Plumbing.
66	Interior wall mounted ladder. See Details. See Specification 055133 Ladders. Color as indicated on Finish Schedule.
108	Gray shading indicates these walls are the boundaries for the building thermal envelope assembly.
144	Electrical meter. See Electrical.
214	10K Lift (By Others).
215	12K Lift (By Others).
216	Tire changer (By Others).
217	Wheel balancer (By Others).
219	Air compressor (By Others).
220	Scissor lift alignment (By Others).
221	Scissor lift alignment console (By Others). Provide conduit in slab as required. See alignment lift specifications (By Others).
222	Alignment scarecrow (By Others).
223	Work bench (By Others).
224	Strut compressor (By Others).
225	Lube console (By Others).
226	Computer podium (By Others).
227	Cashier computer station (By Others).
229	Rolling drain pan (By Others).
230	Tool cart (By Others).
231	Beverage refrigerator (By Others).
232	Bracket mounted fire extinguisher. Provide sign at all fire extinguisher locations which may be visually obstructed. See Details.

AHO ARCHITECTS
a sole proprietorship
www.ahoarch.com

TIMOTHY ARNOLD AHO
REGISTERED
NO. 9084
COMMONWEALTH OF KENTUCKY
ARCHITECT
10/04/2024

Express Oil Change & Tire Engineers

Single Building / Right Hand Oil Change / Front Enter / Side Tire Storage

Morehead, Kentucky

FINAL

No.	Description	Date

2024
© Aho Architects, a sole proprietorship
All Rights Reserved.

Life Safety Plan - Main

Project number	24029
Date	10/04/2024
Drawn by	ARC
Checked by	N/A

LS102

Scale	As indicated

10/8/2024 3:55:17 PM

LIFE SAFETY SYMBOL LEGEND

- Exit Sign
- HC EXIT 32" — Handicap Accessible Egress Width
- 32" — Exit from room (# = minimum clear width in inches)
- Maneuvering clearances at manual swinging doors
- # — Travel Distance
- 1 Hour Rated

LIFE SAFETY NOTES

Notes:

1. Tanks by others contain 928 gallons and 275 gallons each of Class IIIB Liquids (motor oil). See Chapter 50 on Sheet LS101.
2. All equipment by others unless otherwise noted.

Keynote Schedule

Tag	Text
35	Submersible foundation sump pump. Provide Zoeller M98 or comparable product. Coordinate location with Civil and tie into Civil's storm drainage system.
38	Eyewash station. See Plumbing.
46	Oil tank stairs (By Others).
58	Verify location and size of pit exhaust opening with Structural and Mechanical drawings.
66	Interior wall mounted ladder. See Details. See Specification 055133 Ladders. Color as indicated on Finish Schedule.
223	Work bench (By Others).
232	Bracket mounted fire extinguisher. Provide sign at all fire extinguisher locations which may be visually obstructed. See Details.
233	275-gallon Class IIIB new oil tank (By Others).
234	928-gallon Class IIIB new oil tank (By Others). Provide a 2" concrete walkway cap with non-slip surface over (oil tank By Others). Coordinate with equipment supplier prior to installation.
235	928-gallon Class IIB waste oil tank (By Others). Provide a 2" concrete walkway cap with non-slip surface over (oil tank By Others). Coordinate with equipment supplier prior to installation.

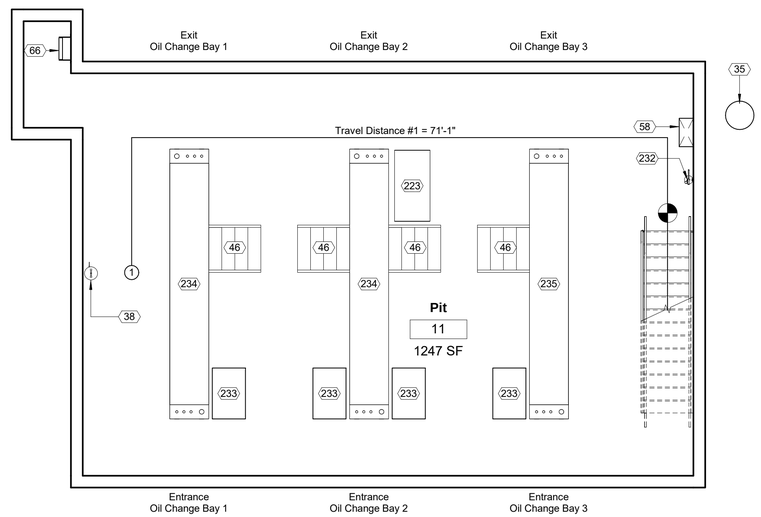

1 04_Life Safety Plan_Pit
3/16" = 1'-0"

AHO ARCHITECTS
a sole proprietorship
www.ahoarch.com

TIMOTHY ARNOLD AHO
REGISTERED
NO. 9084
COMMONWEALTH OF KENTUCKY
ARCHITECT
10/04/2024

Express Oil Change & Tire Engineers
Single Building / Right Hand Oil Change / Front Enter / Side Tire Storage
Morehead, Kentucky

FINAL

No.	Description	Date

2024
© Aho Architects, a sole proprietorship
All Rights Reserved.

Life Safety - Pit

Project number	24029
Date	10/04/2024
Drawn by	ARC
Checked by	N/A

LS103

Scale	As indicated

10/8/2024 3:55:18 PM

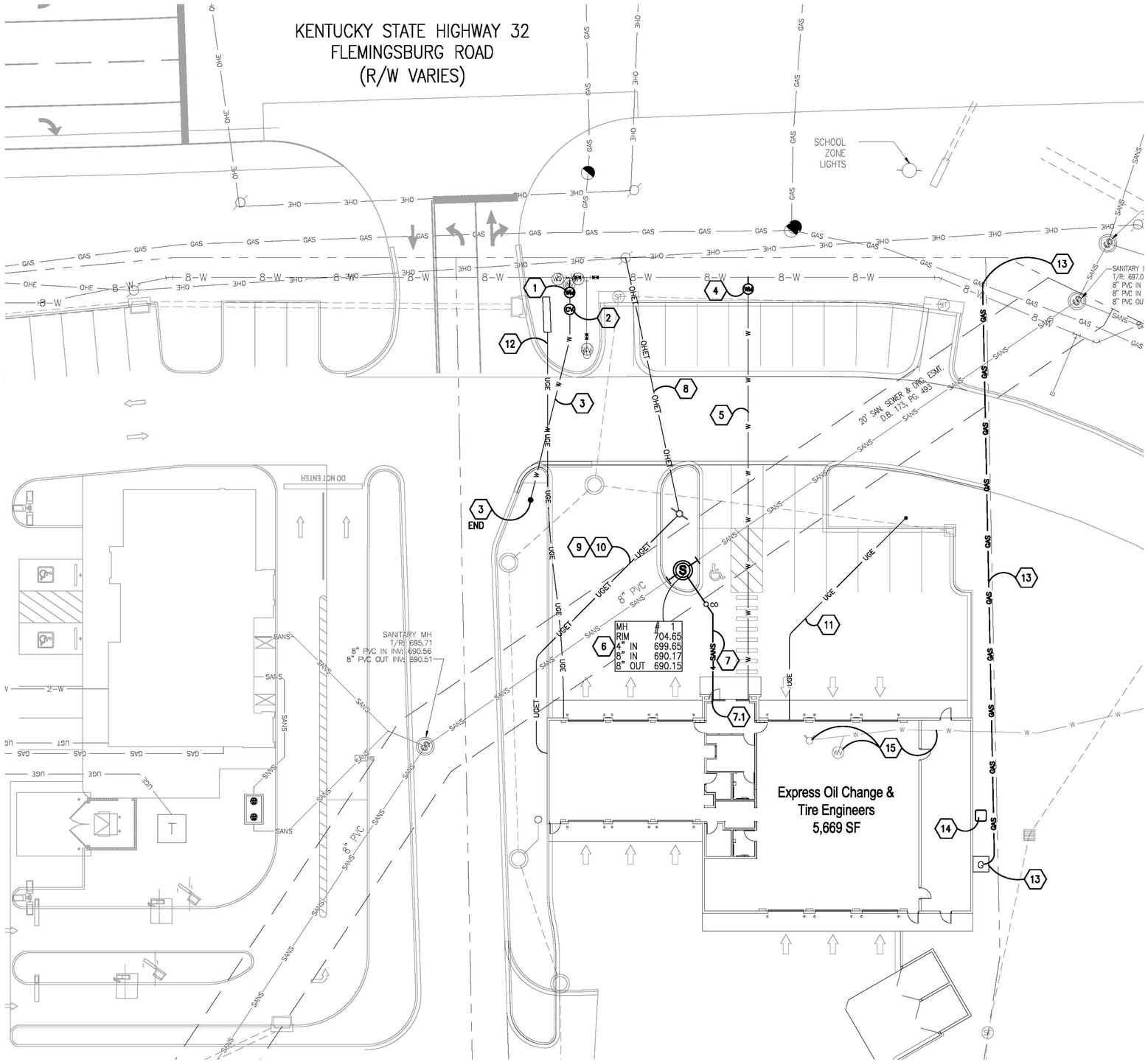

1 Architectural Site Plan
N.T.S.

NOTE:

THIS PLAN IS TO SHOW THE BUILDING AS IT RELATES TO THE SITE. A COMPLETE SET OF CIVIL DRAWINGS ARE TO BE SUBMITTED TO THE AHJ INDEPENDENT OF THIS SUBMITTAL. REFER TO THOSE DRAWINGS FOR ACTUAL INFORMATION.

TRUE NORTH

PLAN NORTH

AHO ARCHITECTS
a sole proprietorship
www.ahoarch.com

TIMOTHY ARNOLD AHO
REGISTERED
NO. 9084
COMMONWEALTH OF KENTUCKY
ARCHITECT
10/04/2024

Express Oil Change & Tire Engineers

Single Building / Right Hand Oil Change / Front Enter / Side Tire Storage

Morehead, Kentucky

FINAL

No.	Description	Date

2024
© Aho Architects, a sole proprietorship
All Rights Reserved.

Architectural Site Plan

Project number	24029
Date	10/04/2024
Drawn by	ARC
Checked by	N/A

AS100

Scale	N.T.S.

10/8/2024 3:55:21 PM

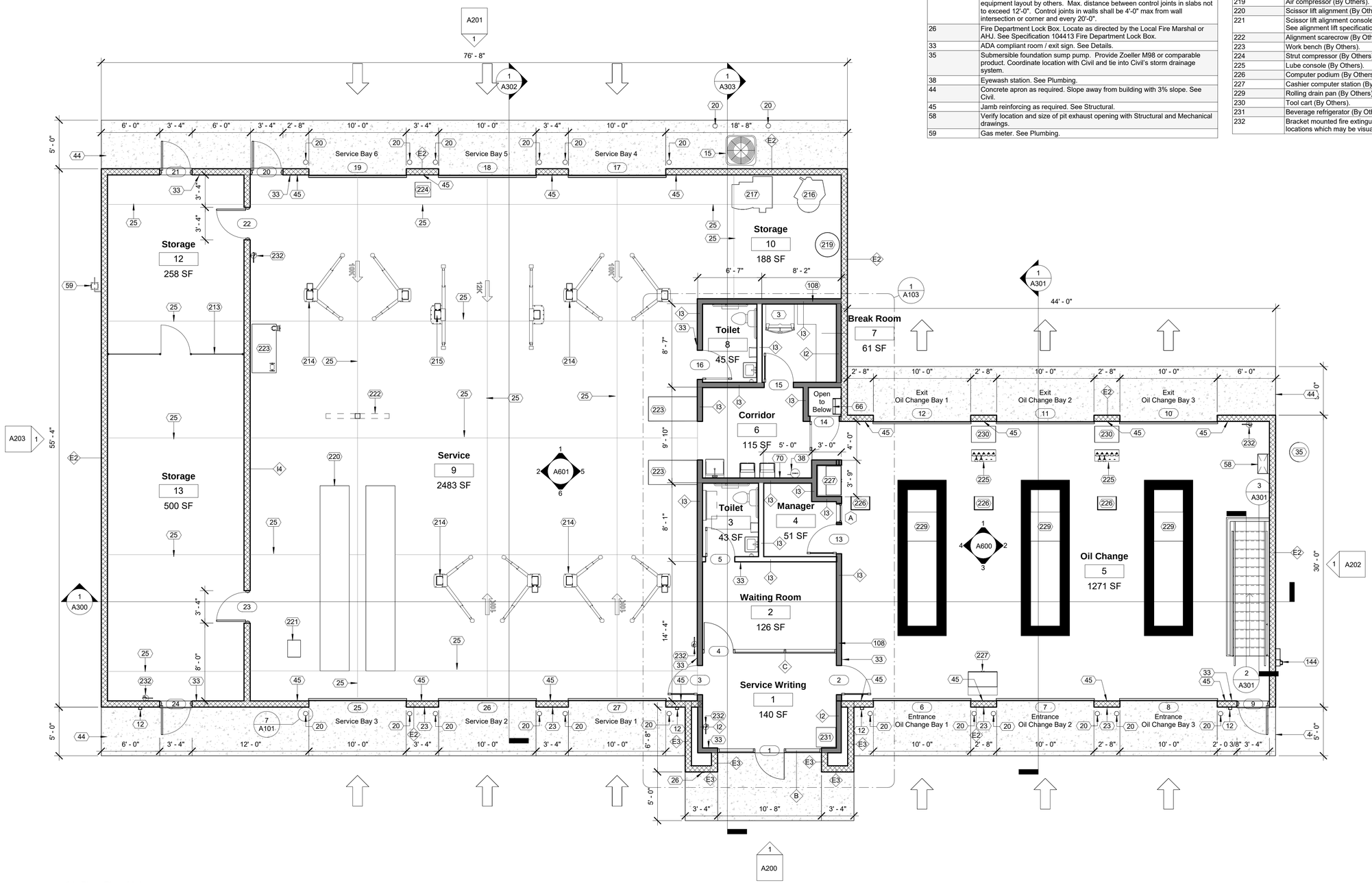

1 01_Floor Plan_Main
3/16" = 1'-0"

Keynote Schedule

Tag	Text
3	Location of 30" wide refrigerator (By Others).
12	Pre-finished metal conductor head with built-in overflow and downspout. Boot piped to storm drainage system unless otherwise indicated to discharge at grade. If discharging at grade, provide a pre-finished elbow and concrete splash block. See Civil for tie-in. See Specification 077100 Roof Specialties.
15	HVAC condensing unit. See Mechanical.
20	4" diameter painted concrete-filled steel pipe bollard. Color as indicated on Finish Schedule. Paint embedded portion of bollard. Use primer and two finish coats. See Details. See Specification 055000 Metal Fabrications.
23	Wall sconce (By Others). See Electrical. Locate junction box for sconces 5'-0" a.f.f. vertically and 4" from center horizontally. Verify with sign company prior to rough-in.
25	Control joint. For control joints in concrete floor slabs, coordinate location with equipment layout by others. Max. distance between control joints in slabs not to exceed 12'-0". Control joints in walls shall be 4'-0" max from wall intersection or corner and every 20'-0".
26	Fire Department Lock Box. Locate as directed by the Local Fire Marshal or AHJ. See Specification 104413 Fire Department Lock Box.
33	ADA compliant room / exit sign. See Details.
35	Submersible foundation sump pump. Provide Zoeller M98 or comparable product. Coordinate location with Civil and tie into Civil's storm drainage system.
38	Eyewash station. See Plumbing.
44	Concrete apron as required. Slope away from building with 3% slope. See Civil.
45	Jamb reinforcing as required. See Structural.
58	Verify location and size of pit exhaust opening with Structural and Mechanical drawings.
59	Gas meter. See Plumbing.

Keynote Schedule

Tag	Text
66	Interior wall mounted ladder. See Details. See Specification 055133 Ladders. Color as indicated on Finish Schedule.
70	Full-height FRP, entire wall. See Specification 066400 Plastic Paneling (Fiberglass Reinforced Panels).
108	Gray shading indicates these walls are the boundaries for the building thermal envelope assembly.
144	Electrical meter. See Electrical.
213	Full height chain-link fence with 3'-0"x7'-0" gate.
214	10K Lift (By Others).
215	12K Lift (By Others).
216	Tire changer (By Others).
217	Wheel balancer (By Others).
219	Air compressor (By Others).
220	Scissor lift alignment (By Others).
221	Scissor lift alignment console (By Others). Provide conduit in slab as required. See alignment lift specifications (By Others).
222	Alignment scarecrow (By Others).
223	Work bench (By Others).
224	Strut compressor (By Others).
225	Lube console (By Others).
226	Computer podium (By Others).
227	Cashier computer station (By Others).
229	Rolling drain pan (By Others).
230	Tool cart (By Others).
231	Beverage refrigerator (By Others).
232	Bracket mounted fire extinguisher. Provide sign at all fire extinguisher locations which may be visually obstructed. See Details.

AHO ARCHITECTS
a sole proprietorship
www.ahoarch.com

TIMOTHY ARNOLD AHO
REGISTERED
NO. 9084
COMMONWEALTH OF KENTUCKY
ARCHITECT
10/04/2024

Express Oil Change & Tire Engineers

Single Building / Right Hand Oil Change / Front Enter / Side Tire Storage

Morehead, Kentucky

FINAL

No.	Description	Date

© 2024 Aho Architects, a sole proprietorship All Rights Reserved.

Floor Plan - Main

Project number	24029
Date	10/04/2024
Drawn by	ARC
Checked by	N/A

A100

Scale 3/16" = 1'-0"

10/8/2024 3:55:26 PM

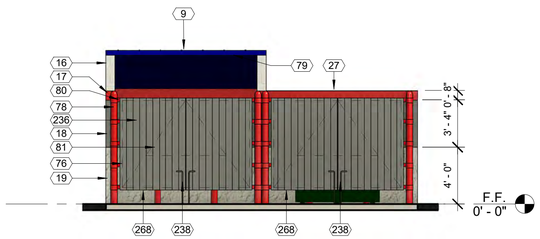

3 05_Dumpster Elevation_A
3/16" = 1'-0"

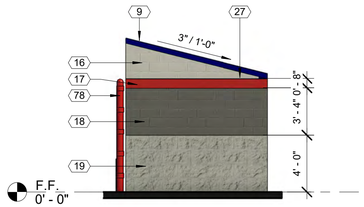

5 07_Dumpster Elevation_C
3/16" = 1'-0"

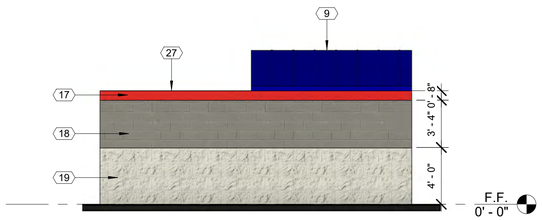

4 06_Dumpster Elevation_B
3/16" = 1'-0"

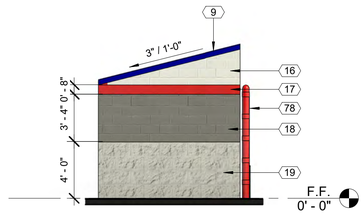

6 08_Dumpster Elevation_D
3/16" = 1'-0"

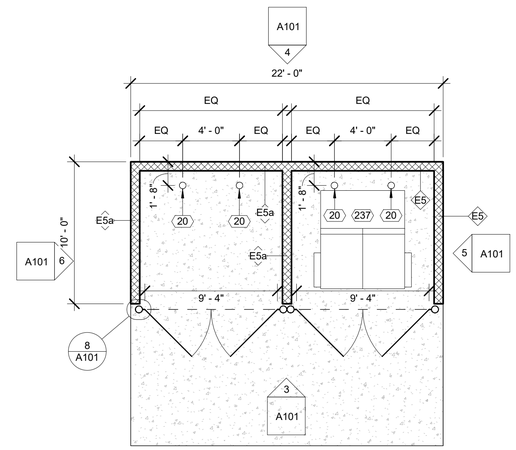

2 02_Floor Plan_Dumpster
3/16" = 1'-0"

Keynote Schedule	
Tag	Text
9	Pre-finished standing seam metal roof system. See Specification 074113.16 Standing Seam Metal Roof Panels. See Finish Schedule for color.
16	Painted smooth-face CMU. See Specification 042200 Concrete Unit Masonry. Color as indicated on Finish Schedule.
17	Painted split-face CMU (bond beam where indicated; see Structural). See Specification 042200 Concrete Unit Masonry. Color as indicated on Finish Schedule.
18	Painted smooth-face CMU. See Specification 042200 Concrete Unit Masonry. Color as indicated on Finish Schedule.
19	Painted split-face CMU (bond beam where indicated; see Structural). See Specification 042200 Concrete Unit Masonry. Color as indicated on Finish Schedule.
20	4" diameter painted concrete-filled steel pipe bollard. Color as indicated on Finish Schedule. Paint embedded portion of bollard. Use primer and two finish coats. See Details. See Specification 055000 Metal Fabrications.
27	Pre-finished metal coping at exposed tops only over self-adhered membrane flashing and pressure treated wood blocking. Slope to drain. Color as indicated on Finish Schedule.
34	4" perforated perimeter drain with silt filtration fabric. See Details.
35	Submersible foundation sump pump. Provide Zoeller M98 or comparable product. Coordinate location with Civil and tie into Civil's storm drainage system.
38	Eyewash station. See Plumbing.
46	Oil tank stairs (By Others).
58	Verify location and size of pit exhaust opening with Structural and Mechanical drawings.
66	Interior wall mounted ladder. See Details. See Specification 055133 Ladders. Color as indicated on Finish Schedule.
72	Painted concrete cap for pipe bollard. Color as indicated on Finish Schedule.
73	1/2" diameter x 4" long metal studs. Provide a total of 4.
74	1/2" expansion joint with backer rod and sealant.
75	1/4" x 6" painted steel bracket with continuous fillet weld to painted steel collar hinge and frame. Color as indicated on Finish Schedule.
76	2" x 2" x 1/4" painted steel gate frame with welded connections. Color as indicated on Finish Schedule.
78	6" diameter painted steel dumpster post. Color as indicated on Finish Schedule.
79	Wrap front face and underside of dumpster roof joists with metal panels to match standing seam metal roof.
80	Hinge collar with grease fitting. Collar welded all around to post. Typical.
81	2" x 2" x 1/4" painted steel cross bracing with horizontal bracing in thirds (beyond). Color as indicated on Finish Schedule.
223	Work bench (By Others).
232	Bracket mounted fire extinguisher. Provide sign at all fire extinguisher locations which may be visually obstructed. See Details.
233	275-gallon Class IIIB new oil tank (By Others).
234	928-gallon Class IIIB new oil tank (By Others). Provide a 2" concrete walkway cap with non-slip surface over (oil tank By Others). Coordinate with equipment supplier prior to installation.
235	928-gallon Class IIB waste oil tank (By Others). Provide a 2" concrete walkway cap with non-slip surface over (oil tank By Others). Coordinate with equipment supplier prior to installation.
236	1x6 painted Trex slats secured to frame. See Finish Schedule for color.
237	Dumpster (By Others).
238	Cane bolts with stops.
268	Hold bottom of gate above grade as necessary to clear adjacent curb height to ensure gates can swing 180 degrees. Coordinate with Civil drawings for clearance needed.

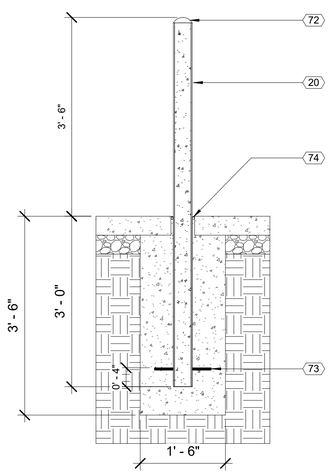

7 DT_Sheet A101_Bollard Detail
3/4" = 1'-0"

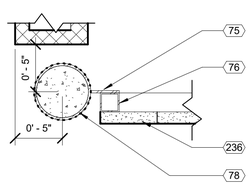

8 DT_Sheet A101_Dumpster Detail @ Gate
1 1/2" = 1'-0"

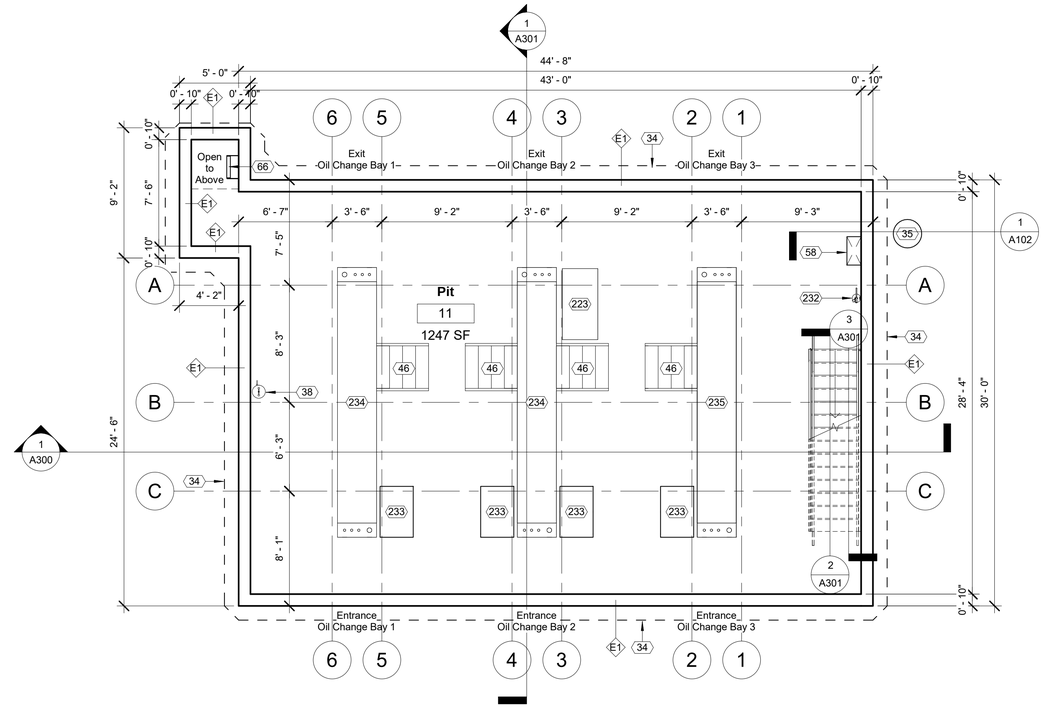

1 00_Floor Plan_Pit
3/16" = 1'-0"

AHO ARCHITECTS
a sole proprietorship
www.ahoarch.com

TIMOTHY ARNOLD AHO
REGISTERED
NO. 9084
COMMONWEALTH OF KENTUCKY
ARCHITECT
10/04/2024

Express Oil Change & Tire Engineers

Single Building / Right Hand Oil Change / Front Enter / Side Tire Storage

Morehead, Kentucky

FINAL

No.	Description	Date

2024
© Aho Architects, a sole proprietorship
All Rights Reserved.

Pit Floor Plan and Site Details

Project number	24029
Date	10/04/2024
Drawn by	ARC
Checked by	N/A

A101

Scale As indicated

10/8/2024 3:55:32 PM

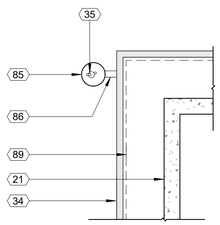

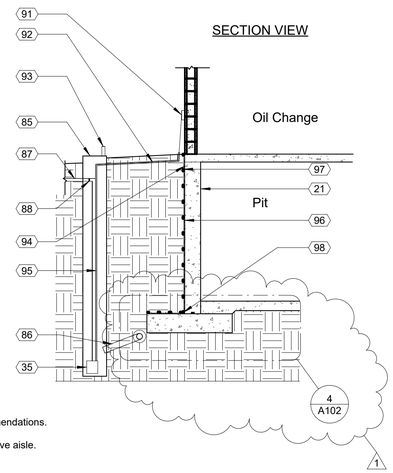

NOTES:

1) Install sump and basin per manufacturer's recommendations.

2) Provide traffic rated lid without vent if located in drive aisle.

1 DT_Sheet A102_Sump Pump Detail
1/4" = 1'-0"

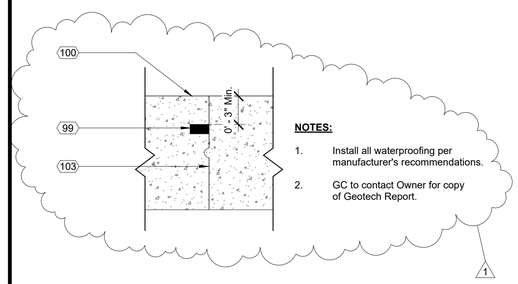

NOTES:

1. Install all waterproofing per manufacturer's recommendations.
2. GC to contact Owner for copy of Geotech Report.

2 DT_Sheet A102_Foundation Construction Joint
1 1/2" = 1'-0"

Keynote Schedule

Tag	Text
21	Cast-in-place concrete wall. See Structural. Membrane waterproofing at perimeter of foundation wall as specified. See Specification 334600 Subdrainage.
34	4" perforated perimeter drain with silt filtration fabric. See Details.
35	Submersible foundation sump pump. Provide Zoeller M98 or comparable product. Coordinate location with Civil and tie into Civil's storm drainage system.
85	18" diameter black corrugated pipe with inlet fittings and solid heavy duty corrugated locking pipe cover set in concrete with power grommet, or Nyloplast drain basin with inlet fittings and lockable cover and power grommet. Contractor's Option. Set pipe in concrete 2'x2'x1'. Embed pipe 6" into concrete.
86	4" discharge pipe to sump pump.
87	2" discharge pipe from sump pump to storm drainage system. Coordinate with Civil.
88	Install union at serviceable depth.
89	Concrete foundation. See Structural.
91	Provide power for sump pump. See Electrical.
92	Power cord for sump pump to be run in conduit from outlet to sump below grade.
93	2" – 3" vent pipe
94	Fasteners at 12" max o.c. for securing subdrainage to pit wall. Follow manufacturer's installation instructions.
95	Pull rope or wire for submersible sump pump.
96	CCW MiraClay woven geotextile against wall/slab.
97	CCW MiraDrain 6200.
98	CCW MiraClay granules or CCW MiraClay mastic.
99	CCW MiraStop.
100	Concrete slab. See Structural.
103	Construction joint.
104	CCW MiraDrain 9800.
105	3" washed #57 stone wrapped in silt filtration fabric.
139	10 mil vapor barrier. See Specification 072600 Vapor Retarders.
245	Lockable cover @ sump pump.

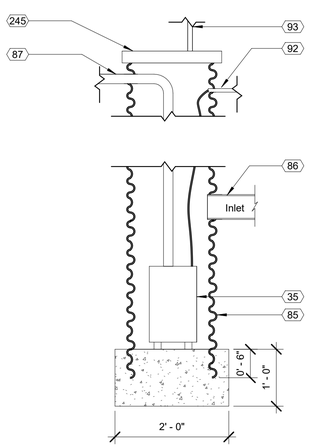

3 DT_Sheet A102_Sump Pump Section
3/4" = 1'-0"

NOTES:

1. Install all waterproofing and drainage components per manufacturer's recommendations.
2. GC to contact Owner for copy of Geotech Report.
3. See Structural for reinforcing in wall and slab.

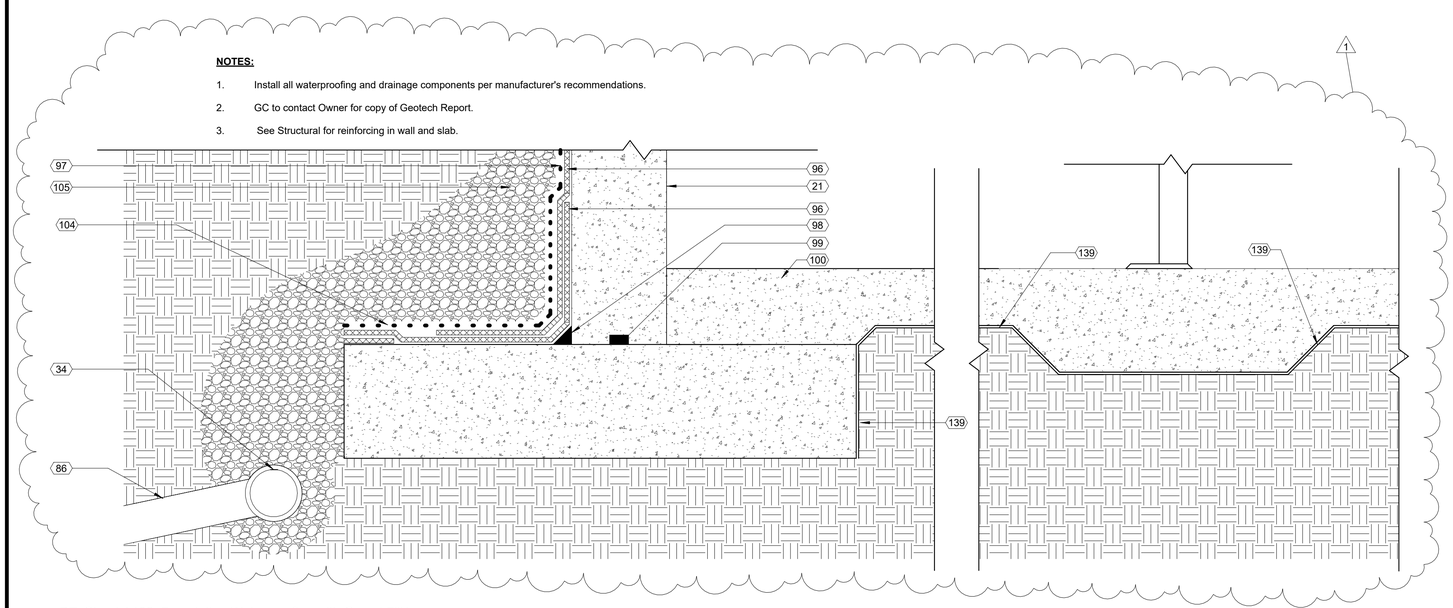

4 DT_Sheet A102_Foundation Waterproofing with Gravel Fill1
1 1/2" = 1'-0"

AHO ARCHITECTS
a sole proprietorship
www.ahoarch.com

TIMOTHY ARNOLD AHO
REGISTERED
NO 9084
COMMONWEALTH OF KENTUCKY
ARCHITECT
10/04/2024

Express Oil Change & Tire Engineers

Single Building / Right Hand Oil Change / Front Enter / Side Tire Storage

Morehead, Kentucky

FINAL

No.	Description	Date
1	ASI #1	11/27/2024

2024
© Aho Architects, a sole proprietorship
All Rights Reserved.

Foundation Details

Project number	24029
Date	10/04/2024
Drawn by	ARC
Checked by	N/A

A102

Scale As indicated

11/27/2024 4:04:36 PM

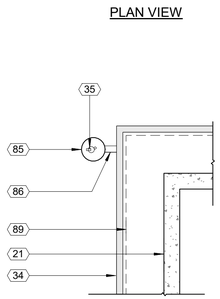

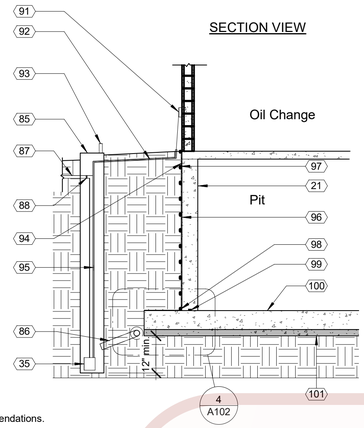

NOTES:

1) Install sump and basin per manufacturer's recommendations.

2) Provide traffic rated lid without vent if located in drive aisle.

1 DT_Sheet A102_Sump Pump Detail
1/4" = 1'-0"

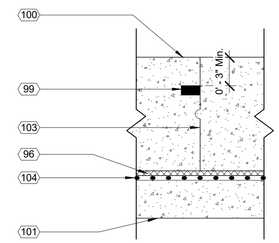

NOTES:

1. Install all waterproofing per manufacturer's recommendations.
2. GC to contact Owner for copy of Geotech Report.

2 DT_Sheet A102_Foundation Construction Joint
1 1/2" = 1'-0"

Keynote Schedule	
Tag	Text
21	Cast-in-place concrete wall. See Structural. Membrane waterproofing at perimeter of foundation wall as specified. See Specification 334600 Subdrainage.
34	4" perforated perimeter drain with silt filtration fabric. See Details.
35	Submersible foundation sump pump. Provide Zoeller M98 or comparable product. Coordinate location with Civil and tie into Civil's storm drainage system.
85	18" diameter black corrugated pipe with inlet fittings and solid heavy duty corrugated locking pipe cover set in concrete with power grommet, or Nyloplast drain basin with inlet fittings and lockable cover and power grommet. Contractor's Option. Set pipe in concrete 2'x2'x1'. Embed pipe 6" into concrete.
86	4" discharge pipe to sump pump.
87	2" discharge pipe from sump pump to storm drainage system. Coordinate with Civil.
88	Install union at serviceable depth.
89	Concrete foundation. See Structural.
91	Provide power for sump pump. See Electrical.
92	Power cord for sump pump to be run in conduit from outlet to sump below grade.
93	2" – 3" vent pipe
94	Fasteners at 12" max o.c. for securing subdrainage to pit wall. Follow manufacturer's installation instructions.
95	Pull rope or wire for submersible sump pump.
96	CCW MiraClay woven geotextile against wall/slab.
97	CCW MiraDrain 6200.
98	CCW MiraClay granules or CCW MiraClay mastic.
99	CCW MiraStop.
100	Concrete slab. See Structural.
101	4" mud slab if required. See Structural.
103	Construction joint.
104	CCW MiraDrain 9800.
105	3" washed #57 stone wrapped in silt filtration fabric.
107	CCW MiraClay 12" Reinforcing Angle Strip at all outside corners.
245	Lockable cover @ sump pump.

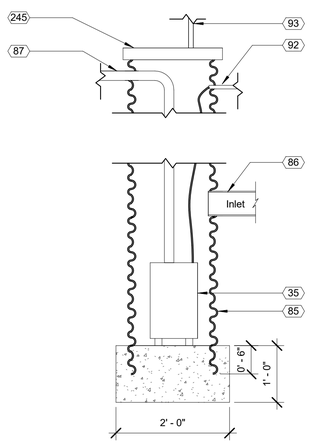

3 DT_Sheet A102_Sump Pump Pipe Section
3/4" = 1'-0"

NOTES:

1. Install all waterproofing and drainage components per manufacturer's recommendations.
2. GC to contact Owner for copy of Geotech Report.
3. See Structural for reinforcing in wall and slab.

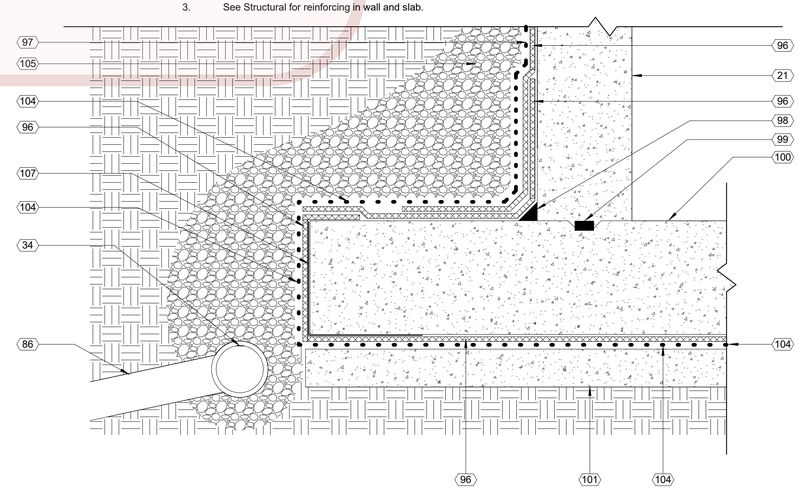

4 DT_Sheet A102_Foundation Waterproofing with Gravel Fill
1 1/2" = 1'-0"

VOID

AHO ARCHITECTS
a sole proprietorship
www.ahoarch.com

TIMOTHY ARNOLD AHO
REGISTERED
NO. 9084
COMMONWEALTH OF KENTUCKY
ARCHITECT
10/04/2024

Express Oil Change & Tire Engineers

Single Building / Right Hand Oil Change / Front Enter / Side Tire Storage

Morehead, Kentucky

FINAL

No.	Description	Date

© 2024
Aho Architects, a sole proprietorship
All Rights Reserved.

Foundation Details

VOID

Project number	24029
Date	10/04/2024
Drawn by	ARC
Checked by	N/A

A102

Scale	As indicated

10/8/2024 3:55:33 PM

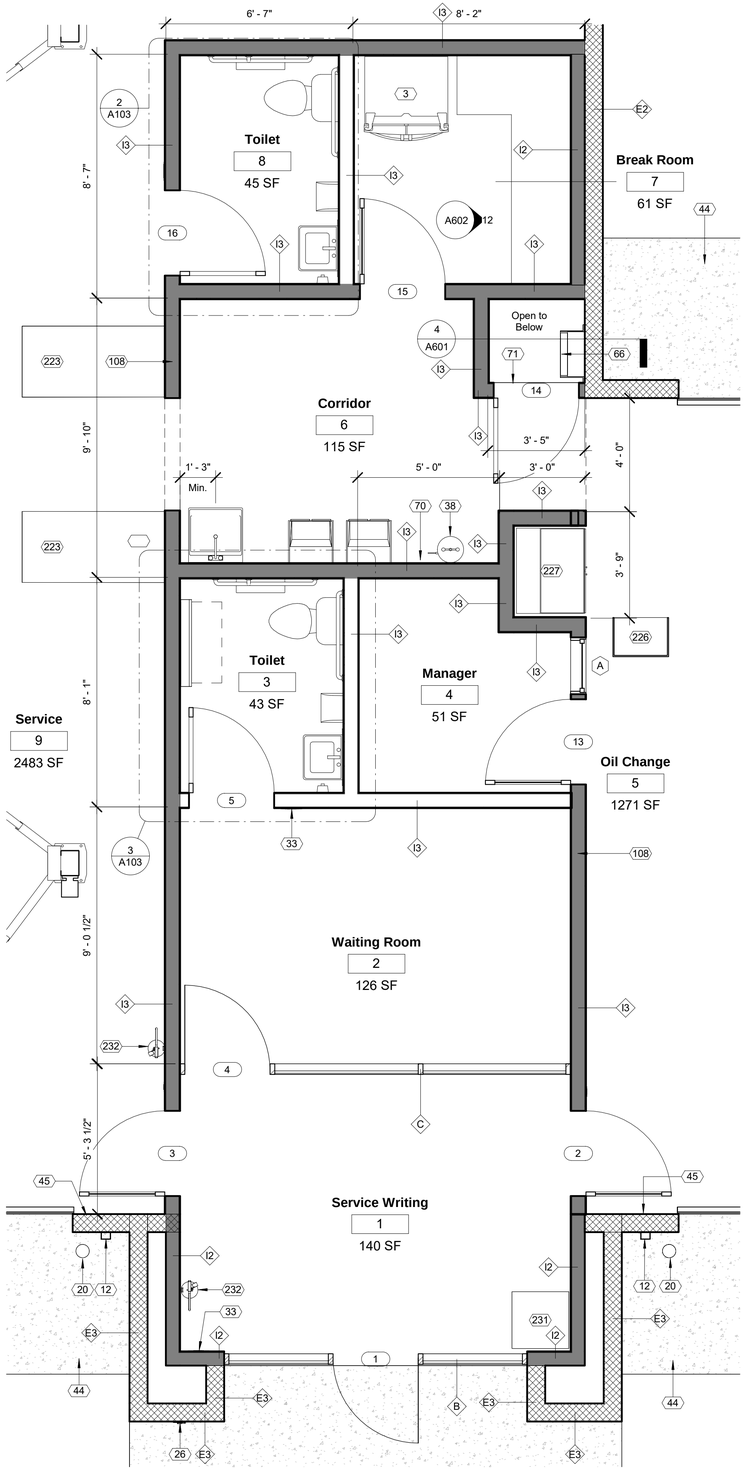

1 08_Enlarged Plan _Main
3/8" = 1'-0"

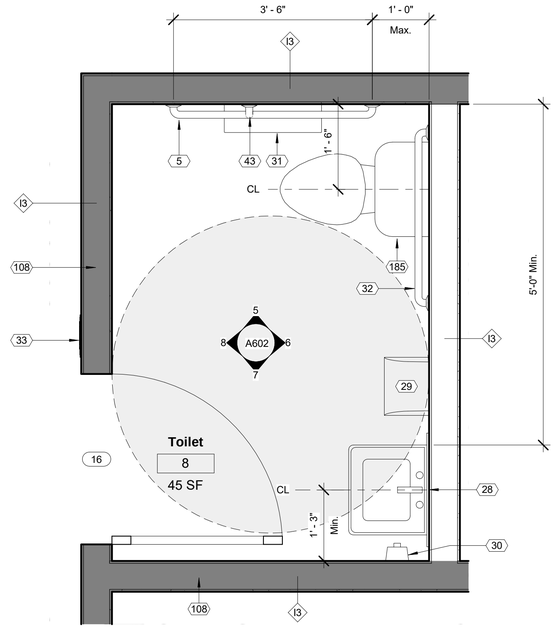

2 10_Enlarged Plan_Toilet 8
3/4" = 1'-0"

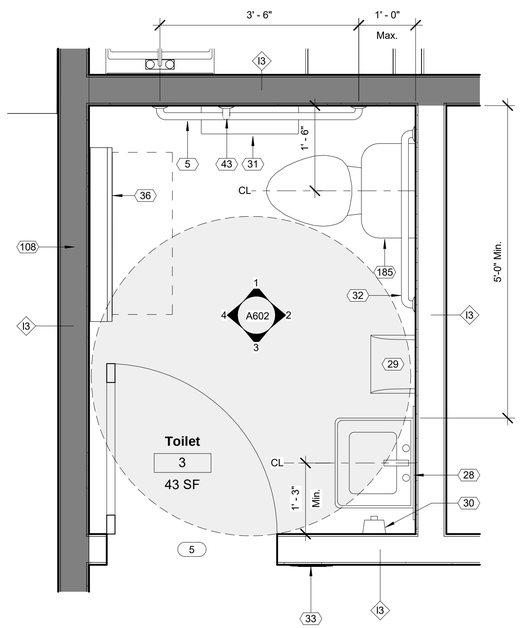

3 09_Enlarged Plan_Toilet 3
3/4" = 1'-0"

Keynote Schedule

Tag	Text
3	Location of 30" wide refrigerator (By Others).
5	42" grab bar with blocking in walls as required. See Specification 102800 Toilet, Bath, and Laundry Accessories.
12	Pre-finished metal conductor head with built-in overflow and downspout. Boot piped to storm drainage system unless otherwise indicated to discharge at grade. If discharging at grade, provide a pre-finished elbow and concrete splash block. See Civil for tie-in. See Specification 077100 Roof Specialties.
20	4" diameter painted concrete-filled steel pipe bollard. Color as indicated on Finish Schedule. Paint embedded portion of bollard. Use primer and two finish coats. See Details. See Specification 055000 Metal Fabrications.
26	Fire Department Lock Box. Locate as directed by the Local Fire Marshal or AHJ. See Specification 104413 Fire Department Lock Box.
28	Framed mirror. See Specification 102800 Toilet, Bath, and Laundry Accessories.
29	Automatic Towel Dispenser (By others). Provide blocking in wall as required. See Specification 102800 Toilet, Bath, and Laundry Accessories.
30	Wall mounted soap dispenser (By Others). Provide blocking in wall as required. See Specification 102800 Toilet, Bath, and Laundry Accessories.
31	Jumbo Dual Roll Toilet Tissue dispenser (By Others). Provide blocking in wall as required. See Specification 102800 Toilet, Bath, and Laundry Accessories.
32	36" grab bar with blocking in walls as required. See Specification 102800 Toilet, Bath, and Laundry Accessories.
33	ADA compliant room / exit sign. See Details.
36	Surface mounted baby changing station with blocking in walls as required. See Specification 102800 Toilet, Bath, and Laundry Accessories.
38	Eyewash station. See Plumbing.
43	24" vertical grab bar with blocking in walls as required. See Specification 102800 Toilet, Bath, and Laundry Accessories.
44	Concrete apron as required. Slope away from building with 3% slope. See Civil.
45	Jamb reinforcing as required. See Structural.
66	Interior wall mounted ladder. See Details. See Specification 055133 Ladders. Color as indicated on Finish Schedule.
70	Full-height FRP, entire wall. See Specification 066400 Plastic Paneling (Fiberglass Reinforced Panels).
71	Edge of slab to align with framed wall in lieu of pit wall below.
108	Gray shading indicates these walls are the boundaries for the building thermal envelope assembly.
185	Flush valve on transfer side of water closet.
223	Work bench (By Others).
226	Computer podium (By Others).
227	Cashier computer station (By Others).
231	Beverage refrigerator (By Others).
232	Bracket mounted fire extinguisher. Provide sign at all fire extinguisher locations which may be visually obstructed. See Details.

AHO ARCHITECTS
a sole proprietorship
www.ahoarch.com

TIMOTHY ARNOLD AHO
REGISTERED
NO. 9084
COMMONWEALTH OF KENTUCKY
ARCHITECT
10/04/2024

Express Oil Change & Tire Engineers

Single Building / Right Hand Oil Change / Front Enter / Side Tire Storage

Morehead, Kentucky

FINAL

No.	Description	Date

© 2024 Aho Architects, a sole proprietorship All Rights Reserved.

Enlarged Floor Plans and Details

Project number	24029
Date	10/04/2024
Drawn by	ARC
Checked by	N/A

A103

Scale: As indicated

10/8/2024 3:55:36 PM

Keynote Schedule	
Tag	Text
6	Lay-in acoustical ceiling tile and grid, supported from structure.
7	Painted ½" gypsum board ceiling secured to structure above. 5/8" Type X where indicated.
11	Pre-finished metal canopy. See Details.
51	36"x36" removable insulated access panel.
108	Gray shading indicates these walls are the boundaries for the building thermal envelope assembly.
114	Contractor to ensure overhead door, track, etc. meets the minimum vertical clearance required for equipment (By Others). Typical.
115	Dashed line indicates extent of overhead doors. Typical.
116	See Engineering drawings for Mechanical/Electrical/Plumbing fixtures and equipment. Typical.
213	Full height chain-link fence with 3'-0"x7'-0" gate.
228	Convex mirrors (By Others).

1 01_RCP_Main
3/16" = 1'-0"

AHO ARCHITECTS
a sole proprietorship
www.ahoarch.com

TIMOTHY ARNOLD AHO
REGISTERED
NO. 9084
COMMONWEALTH OF KENTUCKY
ARCHITECT
10/04/2024

Express Oil Change & Tire Engineers
Single Building / Right Hand Oil Change / Front Enter / Side Tire Storage
Morehead, Kentucky

FINAL

No.	Description	Date

2024
© Aho Architects, a sole proprietorship
All Rights Reserved.

Reflected Ceiling Plan - Main

Project number	24029
Date	10/04/2024
Drawn by	ARC
Checked by	N/A

A104

Scale 3/16" = 1'-0"

10/8/2024 3:55:37 PM

Keynote Schedule	
Tag	Text
8	Exposed to structure above.
58	Verify location and size of pit exhaust opening with Structural and Mechanical drawings.

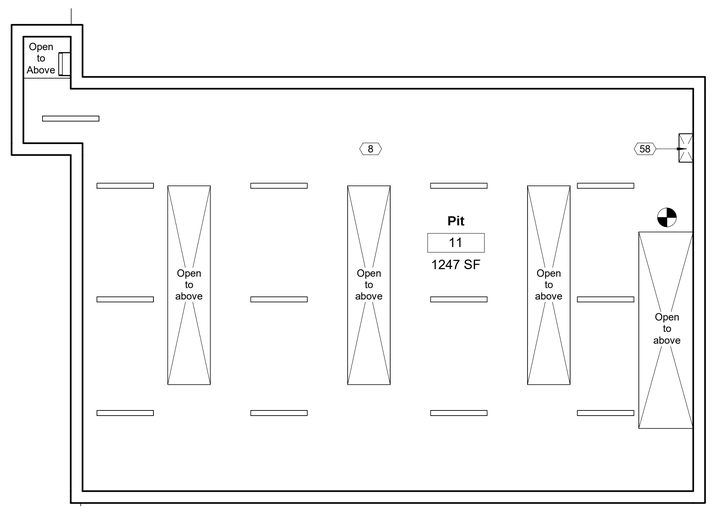

1 00_RCP_Pit
3/16" = 1'-0"

AHO ARCHITECTS
a sole proprietorship
www.ahoarch.com

TIMOTHY ARNOLD AHO
REGISTERED
NO. 9084
COMMONWEALTH OF KENTUCKY
ARCHITECT
10/04/2024

Express Oil Change & Tire Engineers

Single Building / Right Hand Oil Change / Front Enter / Side Tire Storage

Morehead, Kentucky

FINAL

No.	Description	Date

2024
© Aho Architects, a sole proprietorship
All Rights Reserved.

Reflected Ceiling Plan - Pit

Project number	24029
Date	10/04/2024
Drawn by	ARC
Checked by	N/A

A105

Scale	3/16" = 1'-0"

10/8/2024 3:55:38 PM

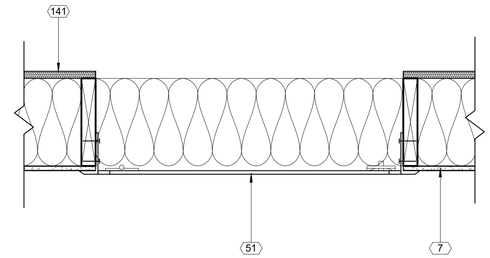

2 DT_Sheet A106_Access Panel Detail
1 1/2" = 1'-0"

Keynote Schedule	
Tag	Text
6	Lay-in acoustical ceiling tile and grid, supported from structure.
7	Painted ½" gypsum board ceiling secured to structure above. 5/8" Type X where indicated.
51	36"x36" removable insulated access panel.
108	Gray shading indicates these walls are the boundaries for the building thermal envelope assembly.
132	2x wood framing with kraft face R-38 batt insulation in between. Kraft face in contact with substrate.
141	3/4" tongue and groove plywood on 2x10 wood joists. Provide R-38 batt kraft face insulation in between joists. Kraft face in contact with gypsum board.

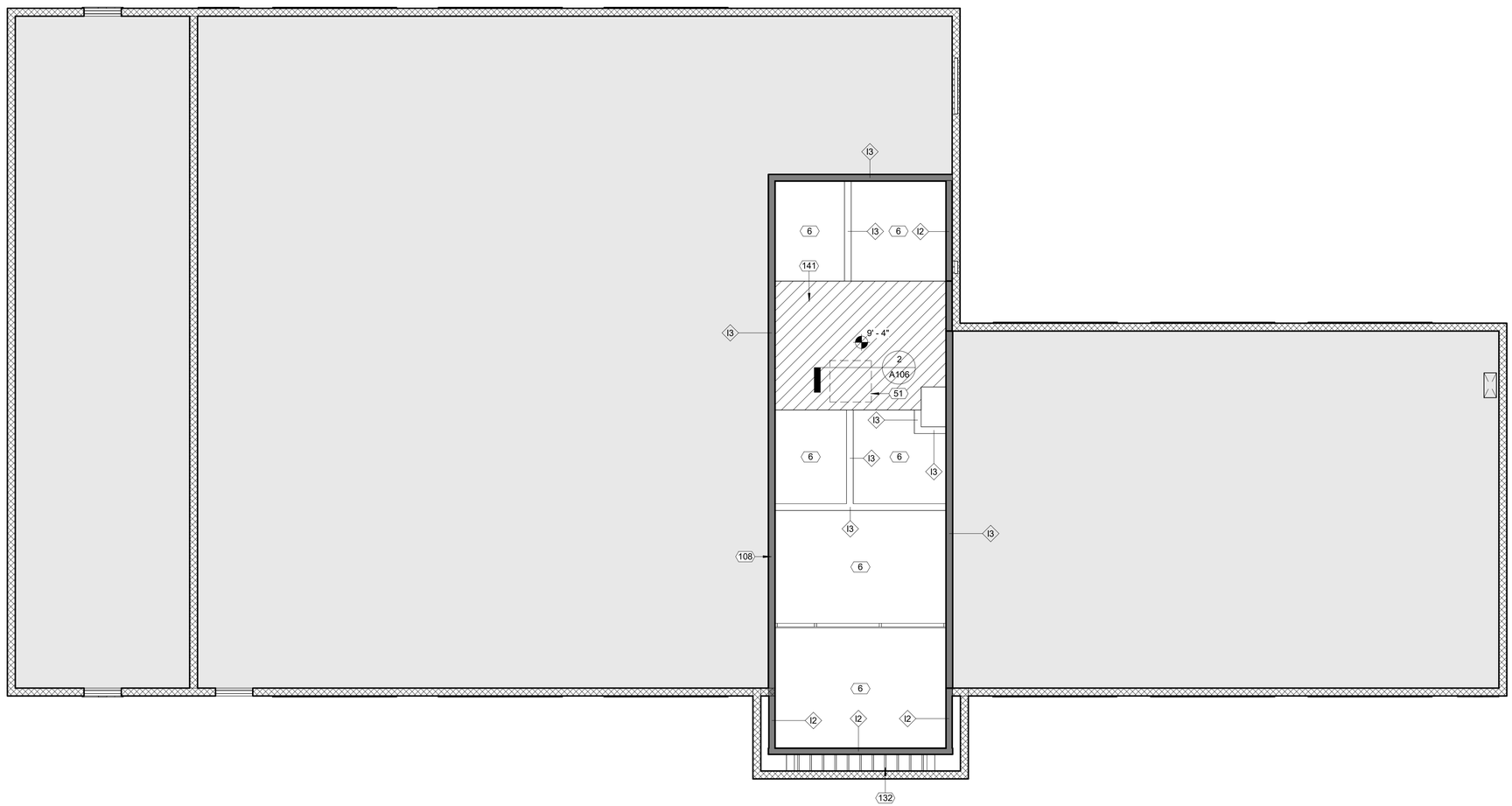

1 11_Floor Plan_Platform
3/16" = 1'-0"

AHO ARCHITECTS
a sole proprietorship
www.ahoarch.com

TIMOTHY ARNOLD AHO
REGISTERED
NO. 9084
COMMONWEALTH OF KENTUCKY
ARCHITECT
10/04/2024

Express Oil Change & Tire Engineers

Single Building / Right Hand Oil Change / Front Enter / Side Tire Storage

Morehead, Kentucky

FINAL

No.	Description	Date

2024
© Aho Architects, a sole proprietorship
All Rights Reserved.

Floor Plan - Platform

Project number	24029
Date	10/04/2024
Drawn by	ARC
Checked by	N/A

A106

Scale	As indicated

10/8/2024 3:55:39 PM

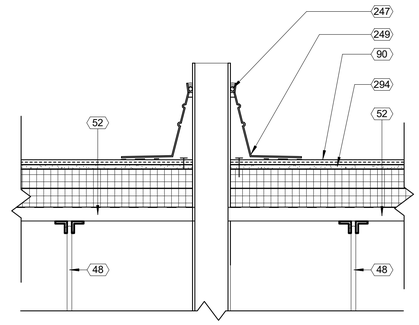

2 DT_Sheet A107_TPO Roof Penetration Detail
1 1/2" = 1'-0"

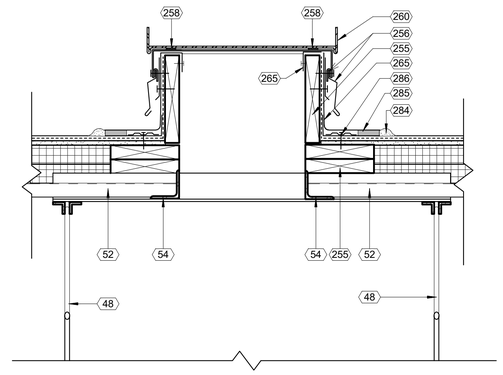

3 DT_Sheet A107_TPO Roof Curb Detail
1 1/2" = 1'-0"

Keynote Schedule	
Tag	Text
1	Wall pack. See Electrical.
11	Pre-finished metal canopy. See Details.
12	Pre-finished metal conductor head with built-in overflow and downspout. Boot piped to storm drainage system unless otherwise indicated to discharge at grade. If discharging at grade, provide a pre-finished elbow and concrete splash block. See Civil for tie-in. See Specification 077100 Roof Specialties.
27	Pre-finished metal coping at exposed tops only over self-adhered membrane flashing and pressure treated wood blocking. Slope to drain. Color as indicated on Finish Schedule.
42	Paint all roof penetrations to match roof color.
48	Bar joist. See Structural.
52	Galvanized metal roof deck. See Structural.
54	Steel angle. See Structural.
90	Fully adhered TPO membrane roofing installed per manufacturer's written instructions. See Specification 075423 Thermoplastic Polyolefin (TPO) Roofing.
247	Sealant compatible with water block sealant.
249	TPO pre-molded vent boot with pre-manufactured TPO membrane flashing by TPO manufacturer.
255	2x pressure treated wood blocking.
256	Prefinished metal flashing and counterflashing.
258	Continuous sealant around perimeter.
260	Base of equipment to extend 1/2" minimum beyond and down over top of roof curb.
265	TPO membrane turned vertically up the wall and fastened to wood blocking at top roof curb, or top of wall framing per detail. Adhere TPO membrane to wall substrate with manufacturer approved bonding adhesive.
284	Cut edge sealant at TPO roof membrane flashing.
285	Hot air weld at TPO membrane and membrane flashing.
286	Fastener and seam fastening plate.
294	½" cover board mechanically attached over polyisocyanurate insulation board (See TPO Spec for required R-value).

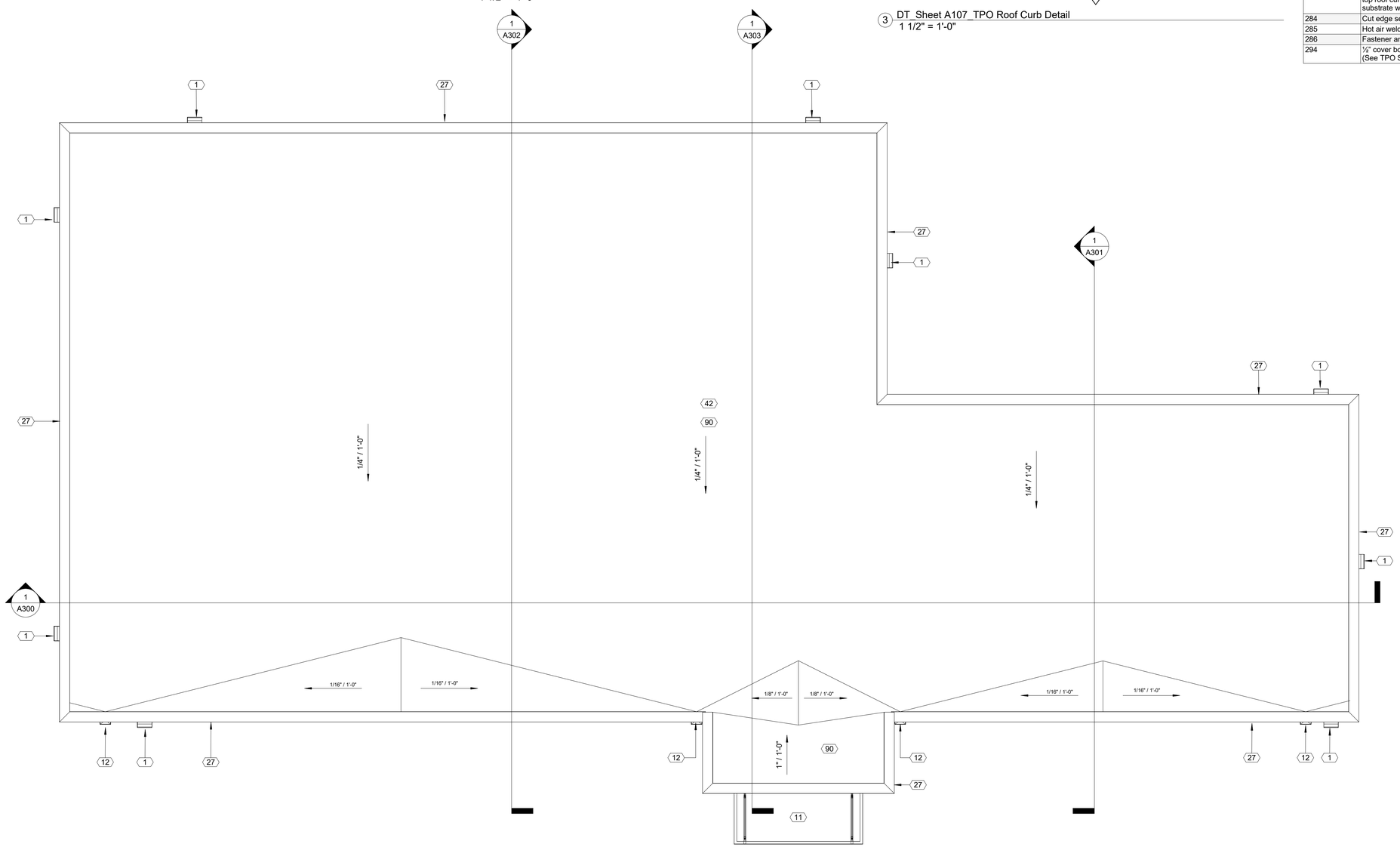

1 03_Roof Plan
3/16" = 1'-0"

AHO ARCHITECTS
a sole proprietorship
www.ahoarch.com

TIMOTHY ARNOLD AHO
REGISTERED
NO. 9084
COMMONWEALTH OF KENTUCKY
ARCHITECT
10/04/2024

Express Oil Change & Tire Engineers

Single Building / Right Hand Oil Change / Front Enter / Side Tire Storage

Morehead, Kentucky

FINAL

No.	Description	Date

2024
© Aho Architects, a sole proprietorship
All Rights Reserved.

Roof Plan

Project number	24029
Date	10/04/2024
Drawn by	ARC
Checked by	N/A

A107

Scale As indicated

10/8/2024 3:55:40 PM

EXTERIOR FINISH MATERIAL LEGEND

PAINTED SPLIT-FACE CMU

Color: SW7669 Summit Gray
Manuf: Sherwin Williams

PAINTED SPLIT-FACE CMU

Color: SW6966 Blueblood
Manuf: Sherwin Williams

PAINTED SPLIT-FACE CMU

Color: Safety Red
Manuf: Sherwin Williams

PAINTED SMOOTH-FACE CMU

Color: Dover Gray
Manuf: Sherwin Williams

PAINTED SMOOTH-FACE CMU

Color: SW7669 Summit Gray
Manuf: Sherwin Williams

HM DOORS

Color: SW7669 Summit Gray
Manuf: Sherwin Williams

STOREFRONT DOORS/WINDOWS

Color: Clear Anodized Aluminum
Manuf: YKK

TINTED GLAZING

Color: Solarban 90 on Clear
Manuf: Vitro Architectural Glass

Keynote Schedule

Tag	Text
1	Wall pack. See Electrical.
11	Pre-finished metal canopy. See Details.
12	Pre-finished metal conductor head with built-in overflow and downspout. Boot piped to storm drainage system unless otherwise indicated to discharge at grade. If discharging at grade, provide a pre-finished elbow and concrete splash block. See Civil for tie-in. See Specification 077100 Roof Specialties.
14	Painted smooth-face CMU (bond beam where indicated; see Structural). See Specification 042200 Concrete Unit Masonry. Color as indicated on Finish Schedule.
16	Painted smooth-face CMU. See Specification 042200 Concrete Unit Masonry. Color as indicated on Finish Schedule.
17	Painted split-face CMU (bond beam where indicated; see Structural). See Specification 042200 Concrete Unit Masonry. Color as indicated on Finish Schedule.
18	Painted smooth-face CMU. See Specification 042200 Concrete Unit Masonry. Color as indicated on Finish Schedule.
19	Painted split-face CMU (bond beam where indicated; see Structural). See Specification 042200 Concrete Unit Masonry. Color as indicated on Finish Schedule.
20	4" diameter painted concrete-filled steel pipe bollard. Color as indicated on Finish Schedule. Paint embedded portion of bollard. Use primer and two finish coats. See Details. See Specification 055000 Metal Fabrications.
21	Cast-in-place concrete wall. See Structural. Membrane waterproofing at perimeter of foundation wall as specified. See Specification 334600 Subdrainage.
22	Signage (By Others). See Electrical.
23	Wall sconce (By Others). See Electrical. Locate junction box for sconces 5'-0" a.f.f. vertically and 4" from center horizontally. Verify with sign company prior to rough-in.
24	Painted split-face CMU (bond beam where indicated; see Structural). See Specification 042200 Concrete Unit Masonry. Color as indicated on Finish Schedule.
25	Control joint. For control joints in concrete floor slabs, coordinate location with equipment layout by others. Max. distance between control joints in slabs not to exceed 12'-0". Control joints in walls shall be 4'-0" max from wall intersection or corner and every 20'-0".
26	Fire Department Lock Box. Locate as directed by the Local Fire Marshal or AHJ. See Specification 104413 Fire Department Lock Box.
27	Pre-finished metal coping at exposed tops only over self-adhered membrane flashing and pressure treated wood blocking. Slope to drain. Color as indicated on Finish Schedule.
35	Submersible foundation sump pump. Provide Zoeller M98 or comparable product. Coordinate location with Civil and tie into Civil's storm drainage system.
47	Provide address identification as directed by the Local Fire Marshal or AHJ.
53	Conduit to be centered horizontally for lights in canopy. Verify with sign company prior to rough-in.
56	Metal louver or vent. Color to match adjacent surface. See Mechanical.
57	Joist extension. See Structural.
59	Gas meter. See Plumbing.
144	Electrical meter. See Electrical.

1 01_Exterior Elevation_Front (North)
3/16" = 1'-0"

AHO ARCHITECTS
a sole proprietorship
www.ahoarch.com

TIMOTHY ARNOLD AHO
REGISTERED
NO 8084
COMMONWEALTH OF KENTUCKY
ARCHITECT
10/04/2024

Express Oil Change & Tire Engineers
Single Building / Right Hand Oil Change / Front Enter / Side Tire Storage
Morehead, Kentucky

FINAL

No.	Description	Date
2	ASI#2	12/19/2024

© 2024 Aho Architects, a sole proprietorship All Rights Reserved.

Exterior Elevation - Front (North)

Project number	24029
Date	10/04/2024
Drawn by	ARC
Checked by	N/A

A200

Scale 3/16" = 1'-0"

12/19/2024 4:02:22 PM

EXTERIOR FINISH MATERIAL LEGEND

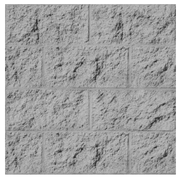

PAINTED SPLIT-FACE CMU

Color: SW7669 Summit Gray
Manuf: Sherwin Williams

PAINTED SPLIT-FACE CMU

Color: SW6966 Blueblood
Manuf: Sherwin Williams

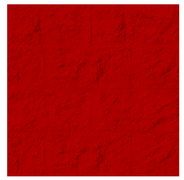

PAINTED SPLIT-FACE CMU

Color: Safety Red
Manuf: Sherwin Williams

PAINTED SMOOTH-FACE CMU

Color: Dover Gray
Manuf: Sherwin Williams

PAINTED SMOOTH-FACE CMU

Color: SW7669 Summit Gray
Manuf: Sherwin Williams

HM DOORS

Color: SW7669 Summit Gray
Manuf: Sherwin Williams

STOREFRONT DOORS/WINDOWS

Color: Clear Anodized Aluminum
Manuf: YKK

TINTED GLAZING

Color: Solarban 90 on Clear
Manuf: Vitro Architectural Glass

SOLARBAN® 90 (2)Clear + Clear Glass Insulating Glass Unit

	Exterior Reflectance	Interior Reflectance	U-Value (Imperial Units) Air	Argon	SHGC
62	01%	12%	19%	0.29	0.24	0.23

1 01_Exterior Elevation_Front (North)
3/16" = 1'-0"

Keynote Schedule

Tag	Text
1	Wall pack. See Electrical.
11	Pre-finished metal canopy. See Details.
12	Pre-finished metal conductor head with built-in overflow and downspout. Boot piped to storm drainage system unless otherwise indicated to discharge at grade. If discharging at grade, provide a pre-finished elbow and concrete splash block. See Civil for tie-in. See Specification 077100 Roof Specialties.
14	Painted smooth-face CMU (bond beam where indicated; see Structural). See Specification 042200 Concrete Unit Masonry. Color as indicated on Finish Schedule.
16	Painted smooth-face CMU. See Specification 042200 Concrete Unit Masonry. Color as indicated on Finish Schedule.
17	Painted split-face CMU (bond beam where indicated; see Structural). See Specification 042200 Concrete Unit Masonry. Color as indicated on Finish Schedule.
18	Painted smooth-face CMU. See Specification 042200 Concrete Unit Masonry. Color as indicated on Finish Schedule.
19	Painted split-face CMU (bond beam where indicated; see Structural). See Specification 042200 Concrete Unit Masonry. Color as indicated on Finish Schedule.
20	4" diameter painted concrete-filled steel pipe bollard. Color as indicated on Finish Schedule. Paint embedded portion of bollard. Use primer and two finish coats. See Details. See Specification 055000 Metal Fabrications.
21	Cast-in-place concrete wall. See Structural. Membrane waterproofing at perimeter of foundation wall as specified. See Specification 334600 Subdrainage.
22	Signage (By Others). See Electrical.
23	Wall sconce (By Others). See Electrical. Locate junction box for sconces 5'-0" a.f.f. vertically and 4" from center horizontally. Verify with sign company prior to rough-in.
24	Painted split-face CMU (bond beam where indicated; see Structural). See Specification 042200 Concrete Unit Masonry. Color as indicated on Finish Schedule.
25	Control joint. For control joints in concrete floor slabs, coordinate location with equipment layout by others. Max. distance between control joints in slabs not to exceed 12'-0". Control joints in walls shall be 4'-0" max from wall intersection or corner and every 20'-0".
26	Fire Department Lock Box. Locate as directed by the Local Fire Marshal or AHJ. See Specification 104413 Fire Department Lock Box.
27	Pre-finished metal coping at exposed tops only over self-adhered membrane flashing and pressure treated wood blocking. Slope to drain. Color as indicated on Finish Schedule.
35	Submersible foundation sump pump. Provide Zoeller M98 or comparable product. Coordinate location with Civil and tie into Civil's storm drainage system.
47	Provide address identification as directed by the Local Fire Marshal or AHJ.
53	Conduit to be centered horizontally for lights in canopy. Verify with sign company prior to rough-in.
56	Metal louver or vent. Color to match adjacent surface. See Mechanical.
59	Gas meter. See Plumbing.
144	Electrical meter. See Electrical.

AHO ARCHITECTS
a sole proprietorship
www.ahoarch.com

TIMOTHY ARNOLD AHO
REGISTERED
NO. 9084
COMMONWEALTH OF KENTUCKY
ARCHITECT
10/04/2024

Express Oil Change & Tire Engineers

Single Building / Right Hand Oil Change / Front Enter / Side Tire Storage

Morehead, Kentucky

FINAL

No.	Description	Date

2024
© Aho Architects, a sole proprietorship
All Rights Reserved.

Exterior Elevation - Front (North)

VOID

Project number	24029
Date	10/04/2024
Drawn by	ARC
Checked by	N/A

A200

Scale 3/16" = 1'-0"

10/8/2024 3:55:47 PM

EXTERIOR FINISH MATERIAL LEGEND

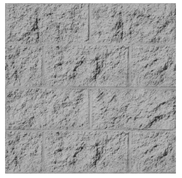

PAINTED SPLIT-FACE CMU

Color: SW7669 Summit Gray
Manuf: Sherwin Williams

PAINTED SPLIT-FACE CMU

Color: SW6966 Blueblood
Manuf: Sherwin Williams

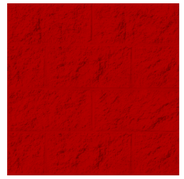

PAINTED SPLIT-FACE CMU

Color: Safety Red
Manuf: Sherwin Williams

PAINTED SMOOTH-FACE CMU

Color: Dover Gray
Manuf: Sherwin Williams

PAINTED SMOOTH-FACE CMU

Color: SW7669 Summit Gray
Manuf: Sherwin Williams

HM DOORS

Color: SW7669 Summit Gray
Manuf: Sherwin Williams

STOREFRONT DOORS/WINDOWS

Color: Clear Anodized Aluminum
Manuf: YKK

TINTED GLAZING

Color: Solarban 90 on Clear
Manuf: Vitro Architectural Glass

Keynote Schedule

Tag	Text
1	Wall pack. See Electrical.
14	Painted smooth-face CMU (bond beam where indicated; see Structural). See Specification 042200 Concrete Unit Masonry. Color as indicated on Finish Schedule.
15	HVAC condensing unit. See Mechanical.
16	Painted smooth-face CMU. See Specification 042200 Concrete Unit Masonry. Color as indicated on Finish Schedule.
17	Painted split-face CMU (bond beam where indicated; see Structural). See Specification 042200 Concrete Unit Masonry. Color as indicated on Finish Schedule.
18	Painted smooth-face CMU. See Specification 042200 Concrete Unit Masonry. Color as indicated on Finish Schedule.
19	Painted split-face CMU (bond beam where indicated; see Structural). See Specification 042200 Concrete Unit Masonry. Color as indicated on Finish Schedule.
20	4" diameter painted concrete-filled steel pipe bollard. Color as indicated on Finish Schedule. Paint embedded portion of bollard. Use primer and two finish coats. See Details. See Specification 055000 Metal Fabrications.
21	Cast-in-place concrete wall. See Structural. Membrane waterproofing at perimeter of foundation wall as specified. See Specification 334600 Subdrainage.
25	Control joint. For control joints in concrete floor slabs, coordinate location with equipment layout by others. Max. distance between control joints in slabs not to exceed 12'-0". Control joints in walls shall be 4'-0" max from wall intersection or corner and every 20'-0".
27	Pre-finished metal coping at exposed tops only over self-adhered membrane flashing and pressure treated wood blocking. Slope to drain. Color as indicated on Finish Schedule.
35	Submersible foundation sump pump. Provide Zoeller M98 or comparable product. Coordinate location with Civil and tie into Civil's storm drainage system.
56	Metal louver or vent. Color to match adjacent surface. See Mechanical.
59	Gas meter. See Plumbing.
144	Electrical meter. See Electrical.

1 02_Exterior Elevation_Rear (South)
3/16" = 1'-0"

AHO ARCHITECTS
a sole proprietorship
www.ahoarch.com

TIMOTHY ARNOLD AHO
REGISTERED
NO. 9084
COMMONWEALTH OF KENTUCKY
ARCHITECT
10/04/2024

Express Oil Change & Tire Engineers
Single Building / Right Hand Oil Change / Front Enter / Side Tire Storage
Morehead, Kentucky

FINAL

No.	Description	Date

© 2024 Aho Architects, a sole proprietorship All Rights Reserved.

Exterior Elevation - Rear (South)

Project number	24029
Date	10/04/2024
Drawn by	ARC
Checked by	N/A

A201

Scale 3/16" = 1'-0"

10/8/2024 3:55:53 PM

EXTERIOR FINISH MATERIAL LEGEND

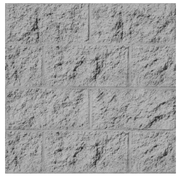

PAINTED SPLIT-FACE CMU

Color: SW7669 Summit Gray
Manuf: Sherwin Williams

PAINTED SPLIT-FACE CMU

Color: SW6966 Blueblood
Manuf: Sherwin Williams

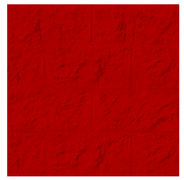

PAINTED SPLIT-FACE CMU

Color: Safety Red
Manuf: Sherwin Williams

PAINTED SMOOTH-FACE CMU

Color: Dover Gray
Manuf: Sherwin Williams

PAINTED SMOOTH-FACE CMU

Color: SW7669 Summit Gray
Manuf: Sherwin Williams

HM DOORS

Color: SW7669 Summit Gray
Manuf: Sherwin Williams

STOREFRONT DOORS/WINDOWS

Color: Clear Anodized Aluminum
Manuf: YKK

TINTED GLAZING

Color: Solarban 90 on Clear
Manuf: Vitro Architectural Glass

Keynote Schedule

Tag	Text
1	Wall pack. See Electrical.
11	Pre-finished metal canopy. See Details.
12	Pre-finished metal conductor head with built-in overflow and downspout. Boot piped to storm drainage system unless otherwise indicated to discharge at grade. If discharging at grade, provide a pre-finished elbow and concrete splash block. See Civil for tie-in. See Specification 077100 Roof Specialties.
14	Painted smooth-face CMU (bond beam where indicated; see Structural). See Specification 042200 Concrete Unit Masonry. Color as indicated on Finish Schedule.
15	HVAC condensing unit. See Mechanical.
16	Painted smooth-face CMU. See Specification 042200 Concrete Unit Masonry. Color as indicated on Finish Schedule.
17	Painted split-face CMU (bond beam where indicated; see Structural). See Specification 042200 Concrete Unit Masonry. Color as indicated on Finish Schedule.
18	Painted smooth-face CMU. See Specification 042200 Concrete Unit Masonry. Color as indicated on Finish Schedule.
19	Painted split-face CMU (bond beam where indicated; see Structural). See Specification 042200 Concrete Unit Masonry. Color as indicated on Finish Schedule.
20	4" diameter painted concrete-filled steel pipe bollard. Color as indicated on Finish Schedule. Paint embedded portion of bollard. Use primer and two finish coats. See Details. See Specification 055000 Metal Fabrications.
21	Cast-in-place concrete wall. See Structural. Membrane waterproofing at perimeter of foundation wall as specified. See Specification 334600 Subdrainage.
22	Signage (By Others). See Electrical.
24	Painted split-face CMU (bond beam where indicated; see Structural). See Specification 042200 Concrete Unit Masonry. Color as indicated on Finish Schedule.
25	Control joint. For control joints in concrete floor slabs, coordinate location with equipment layout by others. Max. distance between control joints in slabs not to exceed 12'-0". Control joints in walls shall be 4'-0" max from wall intersection or corner and every 20'-0".
26	Fire Department Lock Box. Locate as directed by the Local Fire Marshal or AHJ. See Specification 104413 Fire Department Lock Box.
27	Pre-finished metal coping at exposed tops only over self-adhered membrane flashing and pressure treated wood blocking. Slope to drain. Color as indicated on Finish Schedule.
35	Submersible foundation sump pump. Provide Zoeller M98 or comparable product. Coordinate location with Civil and tie into Civil's storm drainage system.
47	Provide address identification as directed by the Local Fire Marshal or AHJ.
56	Metal louver or vent. Color to match adjacent surface. See Mechanical.
59	Gas meter. See Plumbing.
144	Electrical meter. See Electrical.

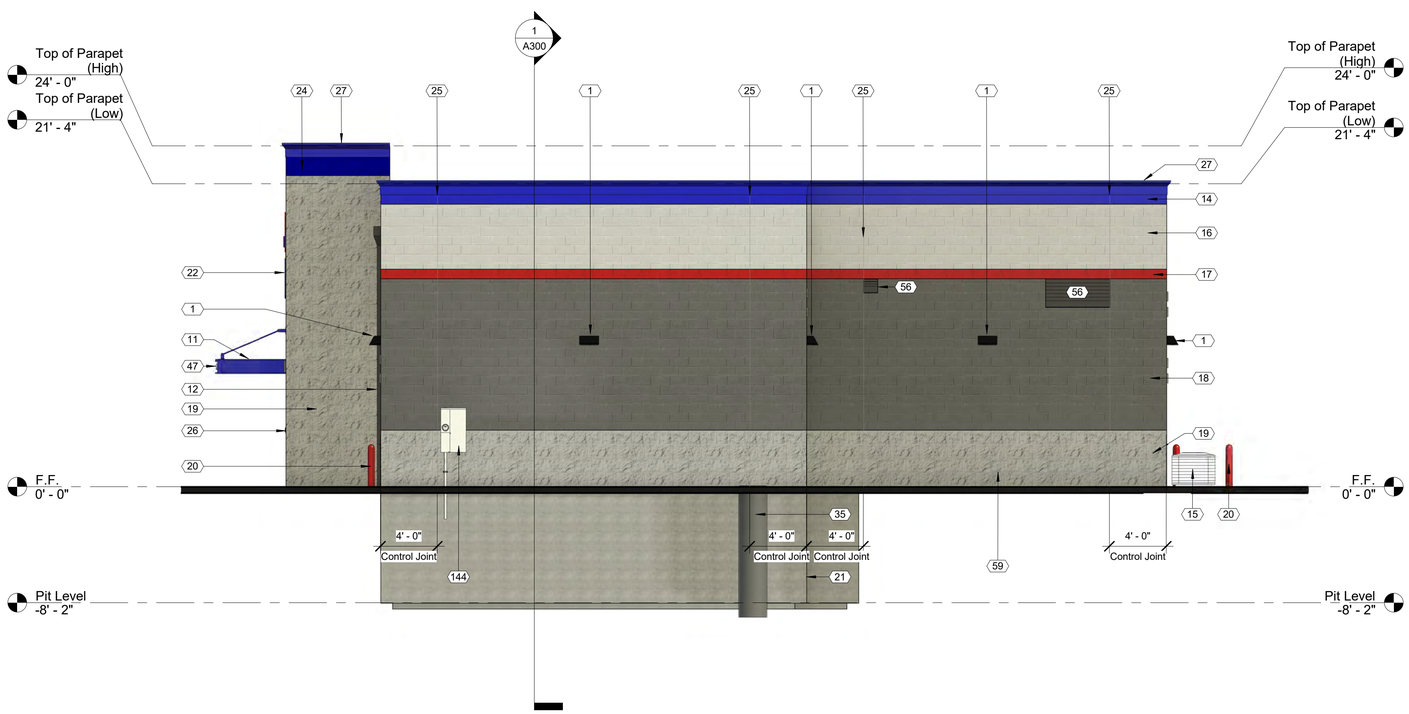

1 03_Exterior Elevation_Right (West)
3/16" = 1'-0"

AHO ARCHITECTS
a sole proprietorship
www.ahoarch.com

TIMOTHY ARNOLD AHO
REGISTERED
NO. 9084
COMMONWEALTH OF KENTUCKY
ARCHITECT
10/04/2024

Express Oil Change & Tire Engineers

Single Building / Right Hand Oil Change / Front Enter / Side Tire Storage

Morehead, Kentucky

FINAL

No.	Description	Date

2024
© Aho Architects, a sole proprietorship
All Rights Reserved.

Exterior Elevation - Right (West)

Project number	24029
Date	10/04/2024
Drawn by	ARC
Checked by	N/A

A202

Scale 3/16" = 1'-0"

10/8/2024 3:55:58 PM

EXTERIOR FINISH MATERIAL LEGEND

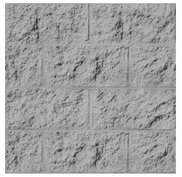

PAINTED SPLIT-FACE CMU

Color: SW7669 Summit Gray
Manuf: Sherwin Williams

PAINTED SPLIT-FACE CMU

Color: SW6966 Blueblood
Manuf: Sherwin Williams

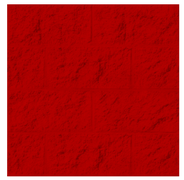

PAINTED SPLIT-FACE CMU

Color: Safety Red
Manuf: Sherwin Williams

PAINTED SMOOTH-FACE CMU

Color: Dover Gray
Manuf: Sherwin Williams

PAINTED SMOOTH-FACE CMU

Color: SW7669 Summit Gray
Manuf: Sherwin Williams

HM DOORS

Color: SW7669 Summit Gray
Manuf: Sherwin Williams

STOREFRONT DOORS/WINDOWS

Color: Clear Anodized Aluminum
Manuf: YKK

SOLARBAN® 90 (2)Clear + Clear Glass Insulating Glass Unit

	Exterior Reflectance	Interior Reflectance	U-Value (Imperial Units) Air	Argon	SHGC
90.1	11%	19%	0.29	0.24	0.33

TINTED GLAZING

Color: Solarban 90 on Clear
Manuf: Vitro Architectural Glass

Keynote Schedule

Tag	Text
1	Wall pack. See Electrical.
11	Pre-finished metal canopy. See Details.
12	Pre-finished metal conductor head with built-in overflow and downspout. Boot piped to storm drainage system unless otherwise indicated to discharge at grade. If discharging at grade, provide a pre-finished elbow and concrete splash block. See Civil for tie-in. See Specification 077100 Roof Specialties.
15	HVAC condensing unit. See Mechanical.
16	Painted smooth-face CMU. See Specification 042200 Concrete Unit Masonry. Color as indicated on Finish Schedule.
17	Painted split-face CMU (bond beam where indicated; see Structural). See Specification 042200 Concrete Unit Masonry. Color as indicated on Finish Schedule.
18	Painted smooth-face CMU. See Specification 042200 Concrete Unit Masonry. Color as indicated on Finish Schedule.
19	Painted split-face CMU (bond beam where indicated; see Structural). See Specification 042200 Concrete Unit Masonry. Color as indicated on Finish Schedule.
20	4" diameter painted concrete-filled steel pipe bollard. Color as indicated on Finish Schedule. Paint embedded portion of bollard. Use primer and two finish coats. See Details. See Specification 055000 Metal Fabrications.
21	Cast-in-place concrete wall. See Structural. Membrane waterproofing at perimeter of foundation wall as specified. See Specification 334600 Subdrainage.
22	Signage (By Others). See Electrical.
24	Painted split-face CMU (bond beam where indicated; see Structural). See Specification 042200 Concrete Unit Masonry. Color as indicated on Finish Schedule.
25	Control joint. For control joints in concrete floor slabs, coordinate location with equipment layout by others. Max. distance between control joints in slabs not to exceed 12'-0". Control joints in walls shall be 4'-0" max from wall intersection or corner and every 20'-0".
26	Fire Department Lock Box. Locate as directed by the Local Fire Marshal or AHJ. See Specification 104413 Fire Department Lock Box.
27	Pre-finished metal coping at exposed tops only over self-adhered membrane flashing and pressure treated wood blocking. Slope to drain. Color as indicated on Finish Schedule.
47	Provide address identification as directed by the Local Fire Marshal or AHJ.
59	Gas meter. See Plumbing.

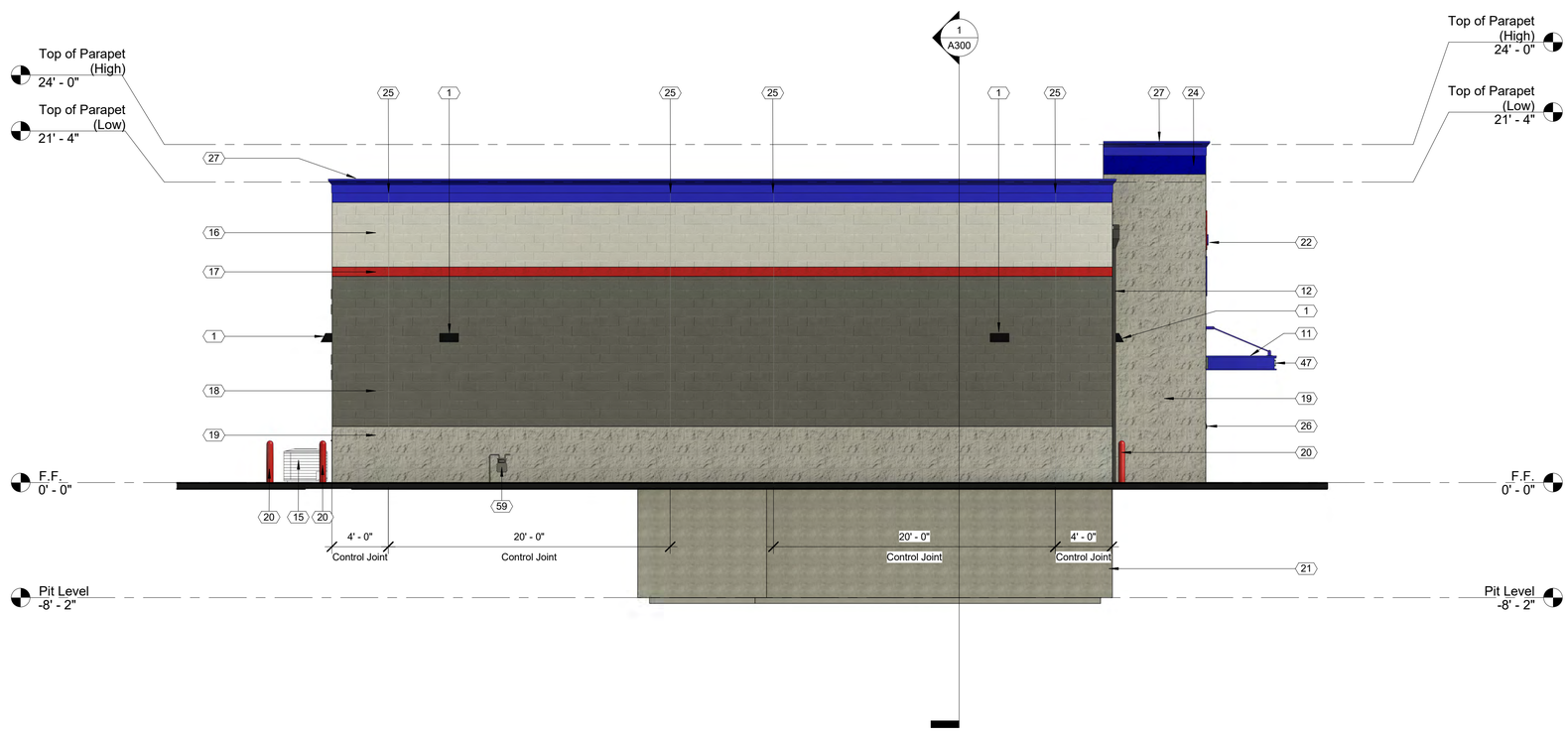

1 04_Exterior Elevation_Left (East)
3/16" = 1'-0"

AHO ARCHITECTS
a sole proprietorship
www.ahoarch.com

TIMOTHY ARNOLD AHO
REGISTERED
NO. 9084
COMMONWEALTH OF KENTUCKY
ARCHITECT
10/04/2024

Express Oil Change & Tire Engineers
Single Building / Right Hand Oil Change / Front Enter / Side Tire Storage
Morehead, Kentucky

FINAL

No.	Description	Date

© 2024 Aho Architects, a sole proprietorship
All Rights Reserved.

Exterior Elevation - Left (East)

Project number	24029
Date	10/04/2024
Drawn by	ARC
Checked by	N/A

A203

Scale 3/16" = 1'-0"

10/8/2024 3:56:03 PM

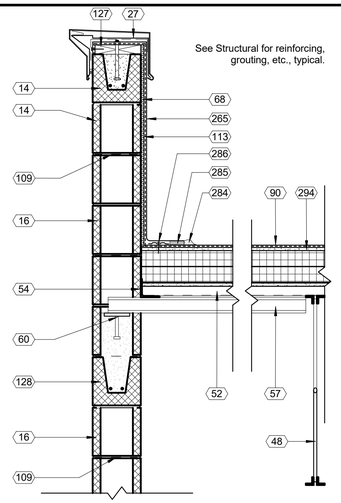

2 DT_A300 Roof at Parapet (Side Wall) Standard
1" = 1'-0"

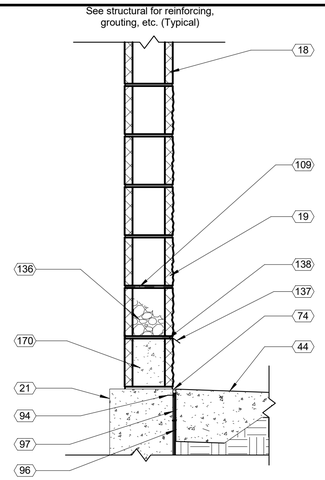

3 DT_A300_Water Table Detail @ Pit Wall Standard
1" = 1'-0"

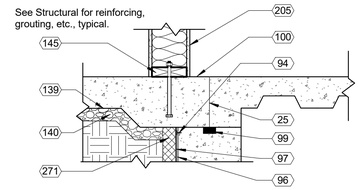

4 DT_A300_Slab On Grade - Pit Wall Transition (Insulation)
1" = 1'-0"

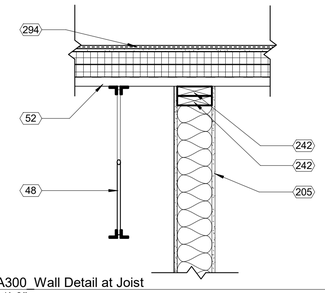

5 DT_A300_Wall Detail at Joist
1" = 1'-0"

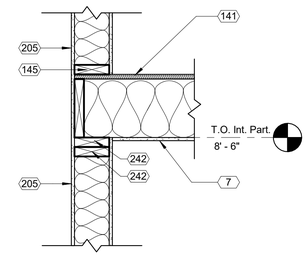

6 DT_A300_Wall Detail @ Floor Joist
1" = 1'-0"

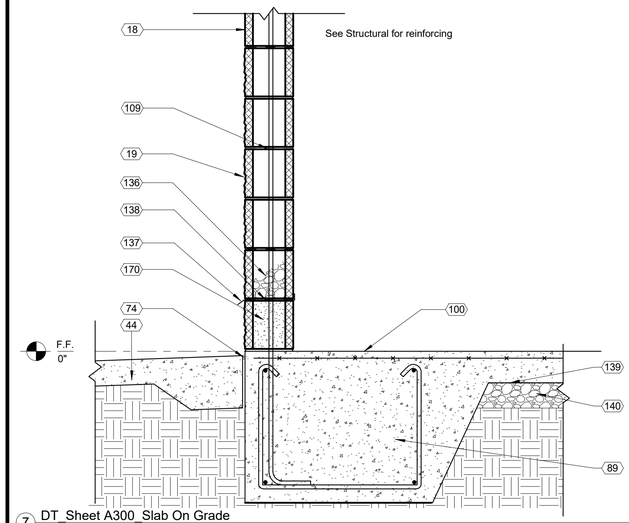

7 DT_Sheet A300_Slab On Grade
1" = 1'-0"

Keynote Schedule

Tag	Text
1	Wall pack. See Electrical.
7	Painted ½" gypsum board ceiling secured to structure above. 5/8" Type X where indicated.
14	Painted smooth-face CMU (bond beam where indicated; see Structural). See Specification 042200 Concrete Unit Masonry. Color as indicated on Finish Schedule.
16	Painted smooth-face CMU. See Specification 042200 Concrete Unit Masonry. Color as indicated on Finish Schedule.
18	Painted smooth-face CMU. See Specification 042200 Concrete Unit Masonry. Color as indicated on Finish Schedule.
19	Painted split-face CMU (bond beam where indicated; see Structural). See Specification 042200 Concrete Unit Masonry. Color as indicated on Finish Schedule.
21	Cast-in-place concrete wall. See Structural. Membrane waterproofing at perimeter of foundation wall as specified. See Specification 334600 Subdrainage.
25	Control joint. For control joints in concrete floor slabs, coordinate location with equipment layout by others. Max. distance between control joints in slabs not to exceed 12'-0". Control joints in walls shall be 4'-0" max from wall intersection or corner and every 20'-0".
27	Pre-finished metal coping at exposed tops only over self-adhered membrane flashing and pressure treated wood blocking. Slope to drain. Color as indicated on Finish Schedule.
33	ADA compliant room / exit sign. See Details.

Keynote Schedule

Tag	Text
35	Submersible foundation sump pump. Provide Zoeller M98 or comparable product. Coordinate location with Civil and tie into Civil's storm drainage system.
38	Eyewash station. See Plumbing.
44	Concrete apron as required. Slope away from building with 3% slope. See Civil.
46	Oil tank stairs (By Others).
48	Bar joist. See Structural.
52	Galvanized metal roof deck. See Structural.
54	Steel angle. See Structural.
56	Metal louver or vent. Color to match adjacent surface. See Mechanical.
57	Joist extension. See Structural.
58	Verify location and size of pit exhaust opening with Structural and Mechanical drawings.
59	Gas meter. See Plumbing.
60	Steel plate with headed studs. See Structural.
62	4" high stainless steel chair rail (By Others).
65	Word Wall. Use extreme bond primer. Graphics (By Others).
68	1/2" exterior plywood sheathing.
74	1/2" expansion joint with backer rod and sealant.
89	Concrete foundation. See Structural.
90	Fully adhered TPO membrane roofing installed per manufacturer's written instructions. See Specification 075423 Thermoplastic Polyolefin (TPO) Roofing.

Keynote Schedule

Tag	Text
94	Fasteners at 12" max o.c. for securing subdrainage to pit wall. Follow manufacturer's installation instructions.
96	CCW MiraClay woven geotextile against wall/slab.
97	CCW MiraDrain 6200.
99	CCW MiraStop.
100	Concrete slab. See Structural.
109	Horizontal joint reinforcement at 16" o.c. vertical.
113	Fluid applied vapor permeable air barrier. See Specification 072726 Fluid Applied Membrane Air Barrier.
127	2x pressure treated wood nailer.
128	Painted smooth-face 8" concrete-filled "U" block bond beam. Condition varies. See Structural.
136	Pea gravel above through wall flashing.
137	Flashing between first and second course to utilize BlockFlash. In addition to the pea gravel specified. Provide a drainage mat in open masonry cell directly above the BlockFlash pan.
138	Drainable weeps at every third mortar joint.
139	10 mil vapor barrier. See Specification 072600 Vapor Retarders.
140	Porous fill. See Geotechnical Report.
141	3/4" tongue and groove plywood on 2x10 wood joists. Provide R-38 batt kraft face insulation in between joists. Kraft face in contact with gypsum board.

Keynote Schedule

Tag	Text
145	2x pressure treated wood sill plate.
170	Fill first course of CMU with grout.
205	1 layer of 1/2" painted gypsum board on both sides of 2"x6" wood studs at 16" o.c. Infill with kraft-faced R-20 batt insulation. Kraft in contact with gypsum board.
213	Full height chain-link fence with 3'-0"x7'-0" gate.
214	10K Lift (By Others).
215	12K Lift (By Others).
222	Alignment scarecrow (By Others).
223	Work bench (By Others).
224	Strut compressor (By Others).
225	Lube console (By Others).
226	Computer podium (By Others).
232	Bracket mounted fire extinguisher. Provide sign at all fire extinguisher locations which may be visually obstructed. See Details.
234	928-gallon Class IIIB new oil tank (By Others). Provide a 2" concrete walkway cap with non-slip surface over (oil tank By Others). Coordinate with equipment supplier prior to installation.
235	928-gallon Class IIB waste oil tank (By Others). Provide a 2" concrete walkway cap with non-slip surface over (oil tank By Others). Coordinate with equipment supplier prior to installation.
242	2x pressure treated wood top plate.

Keynote Schedule

Tag	Text
265	TPO membrane turned vertically up the wall and fastened to wood blocking at top roof curb, or top of wall framing per detail. Adhere TPO membrane to wall substrate with manufacturer approved bonding adhesive.
271	Continuous rigid insulation for 24" below slab at perimeter of thermal envelope. See Specification Section 072100 – Thermal Insulation for thickness.
284	Cut edge sealant at TPO roof membrane flashing.
285	Hot air weld at TPO membrane and membrane flashing.
286	Fastener and seam fastening plate.
294	½" cover board mechanically attached over polyisocyanurate insulation board (See TPO Spec for required R-value).

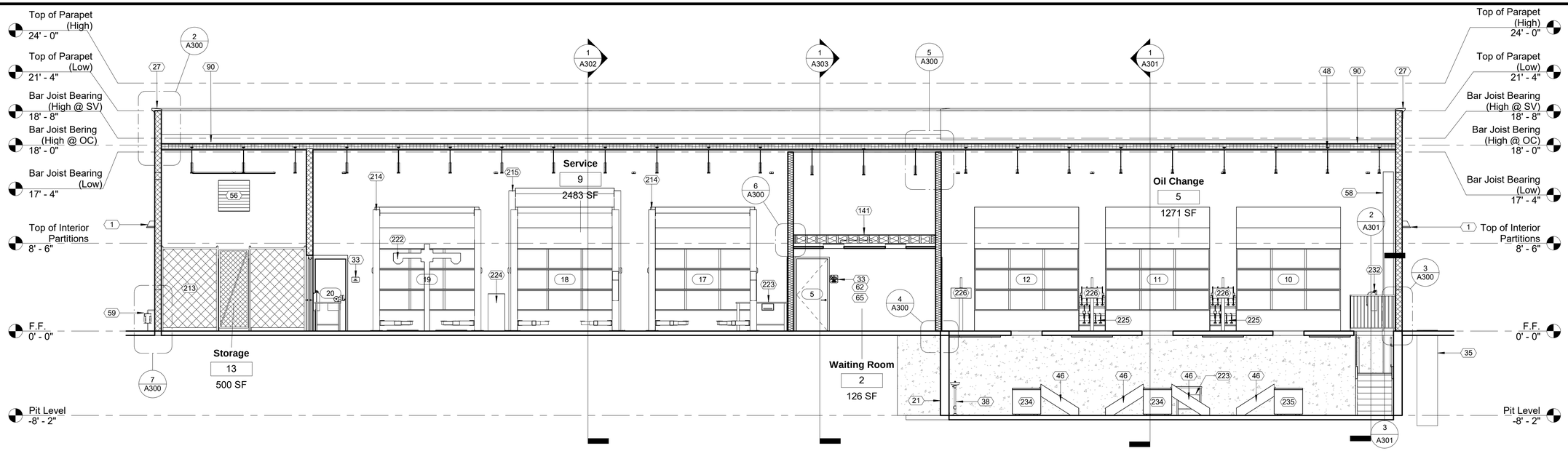

1 Building Section 1
3/16" = 1'-0"

AHO ARCHITECTS
a sole proprietorship
www.ahoarch.com

TIMOTHY ARNOLD AHO
REGISTERED
NO. 9084
COMMONWEALTH OF KENTUCKY
ARCHITECT
10/04/2024

Express Oil Change & Tire Engineers

Single Building / Right Hand Oil Change / Front Enter / Side Tire Storage

Morehead, Kentucky

FINAL

No.	Description	Date

© 2024 Aho Architects, a sole proprietorship All Rights Reserved.

Building Sections

Project number	24029
Date	10/04/2024
Drawn by	ARC
Checked by	N/A

A300

Scale As indicated

10/8/2024 3:56:07 PM

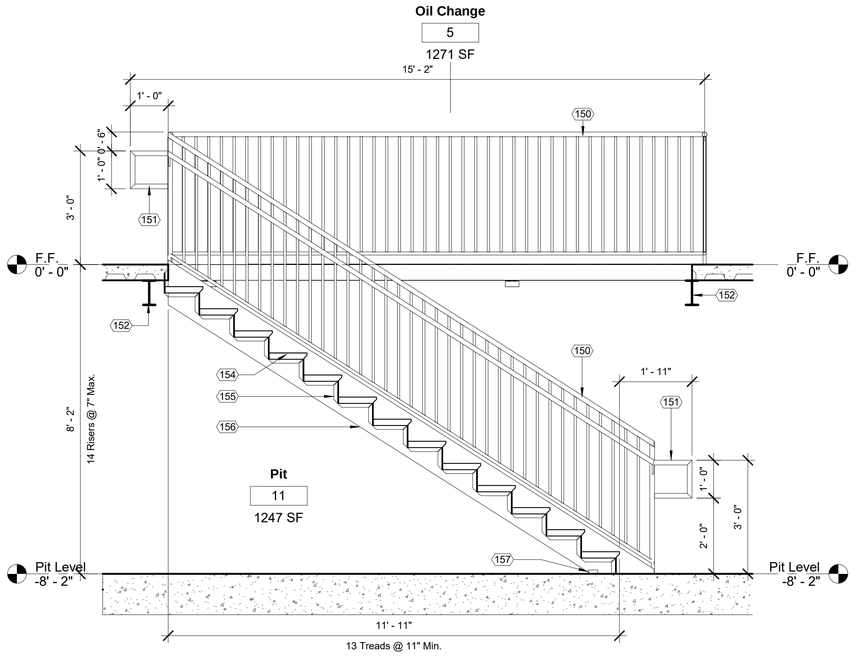

2 Stair Section 1
1/2" = 1'-0"

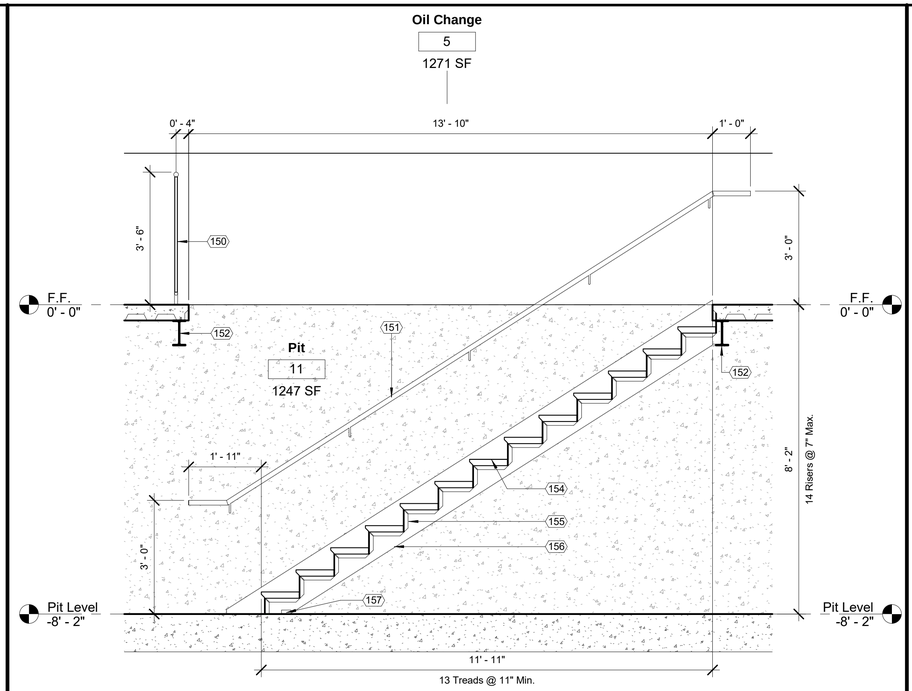

3 Stair Section 2
1/2" = 1'-0"

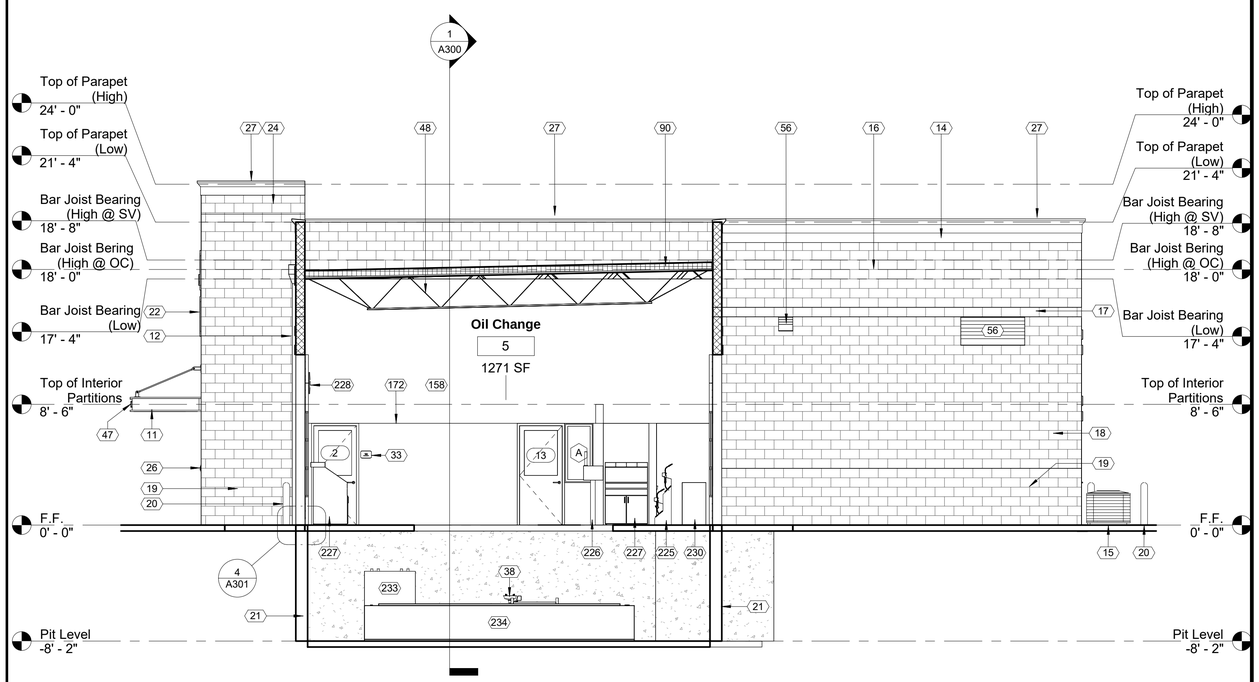

1 Building Section 2
3/16" = 1'-0"

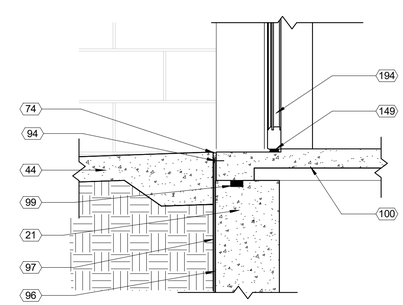

4 DT_Sheet A301_Slab Detail @ Pit Wall
1" = 1'-0"

Keynote Schedule

Tag	Text
11	Pre-finished metal canopy. See Details.
12	Pre-finished metal conductor head with built-in overflow and downspout. Boot piped to storm drainage system unless otherwise indicated to discharge at grade. If discharging at grade, provide a pre-finished elbow and concrete splash block. See Civil for tie-in. See Specification 077100 Roof Specialties.
14	Painted smooth-face CMU (bond beam where indicated; see Structural). See Specification 042200 Concrete Unit Masonry. Color as indicated on Finish Schedule.
15	HVAC condensing unit. See Mechanical.
16	Painted smooth-face CMU. See Specification 042200 Concrete Unit Masonry. Color as indicated on Finish Schedule.
17	Painted split-face CMU (bond beam where indicated; see Structural). See Specification 042200 Concrete Unit Masonry. Color as indicated on Finish Schedule.
18	Painted smooth-face CMU. See Specification 042200 Concrete Unit Masonry. Color as indicated on Finish Schedule.
19	Painted split-face CMU (bond beam where indicated; see Structural). See Specification 042200 Concrete Unit Masonry. Color as indicated on Finish Schedule.
20	4" diameter painted concrete-filled steel pipe bollard. Color as indicated on Finish Schedule. Paint embedded portion of bollard. Use primer and two finish coats. See Details. See Specification 055000 Metal Fabrications.
21	Cast-in-place concrete wall. See Structural. Membrane waterproofing at perimeter of foundation wall as specified. See Specification 334600 Subdrainage.
22	Signage (By Others). See Electrical.
24	Painted split-face CMU (bond beam where indicated; see Structural). See Specification 042200 Concrete Unit Masonry. Color as indicated on Finish Schedule.
26	Fire Department Lock Box. Locate as directed by the Local Fire Marshal or AHJ. See Specification 104413 Fire Department Lock Box.
27	Pre-finished metal coping at exposed tops only over self-adhered membrane flashing and pressure treated wood blocking. Slope to drain. Color as indicated on Finish Schedule.
33	ADA compliant room / exit sign. See Details.
38	Eyewash station. See Plumbing.
44	Concrete apron as required. Slope away from building with 3% slope. See Civil.
47	Provide address identification as directed by the Local Fire Marshal or AHJ.
48	Bar joist. See Structural.
56	Metal louver or vent. Color to match adjacent surface. See Mechanical.
74	1/2" expansion joint with backer rod and sealant.
90	Fully adhered TPO membrane roofing installed per manufacturer's written instructions. See Specification 075423 Thermoplastic Polyolefin (TPO) Roofing.
94	Fasteners at 12" max o.c. for securing subdrainage to pit wall. Follow manufacturer's installation instructions.
96	CCW MiraClay woven geotextile against wall/slab.
97	CCW MiraDrain 6200.
99	CCW MiraStop.
100	Concrete slab. See Structural.
149	1/2" recess at scheduled door. See Structural.
150	Painted guardrail with painted 1/2" round pickets at 4" max o.c. See Finish Schedule for color. See Specification 055213 Pipe and Tube Railings.
151	Painted 1-1/2" outside diameter pipe handrail. Return handrail to guard/wall. Typical. See Finish Schedule for color. See Specification 055213 Pipe and Tube Railings.
152	Paint all structural steel P-5 Safety Yellow.
154	Concrete filled pre-fabricated metal pan stair treads with safety yellow abrasive nosing, full grit, full length, adhered and fastened. Typical. See Finish Schedule for color. See Specification 055113 Metal Pan Stairs.
155	1-1/4" steel angle clips.
156	10" steel channel stringer. See Finish Schedule for color. See Specification 055113 Metal Pan Stairs.
157	3"x3"x3-1/4" angle floor clip.
158	Vinyl letters (By Others).
172	Ensure paint line occurs at top of door and window frames. Ensure all openings, alcoves and windows align with top of door frame. Typical in Oil and Service Bays.
194	Scheduled door. See plans for details.
225	Lube console (By Others).
226	Computer podium (By Others).
227	Cashier computer station (By Others).
228	Convex mirrors (By Others).
230	Tool cart (By Others).
233	275-gallon Class IIIB new oil tank (By Others).
234	928-gallon Class IIIB new oil tank (By Others). Provide a 2" concrete walkway cap with non-slip surface over (oil tank By Others). Coordinate with equipment supplier prior to installation.

AHO ARCHITECTS
a sole proprietorship
www.ahoarch.com

TIMOTHY ARNOLD AHO
REGISTERED
NO. 9084
COMMONWEALTH OF KENTUCKY
ARCHITECT
10/04/2024

Express Oil Change & Tire Engineers

Single Building / Right Hand Oil Change / Front Enter / Side Tire Storage

Morehead, Kentucky

FINAL

No.	Description	Date

© 2024 Aho Architects, a sole proprietorship
All Rights Reserved.

Building Sections

Project number	24029
Date	10/04/2024
Drawn by	ARC
Checked by	N/A

A301

Scale As indicated

10/8/2024 3:56:11 PM

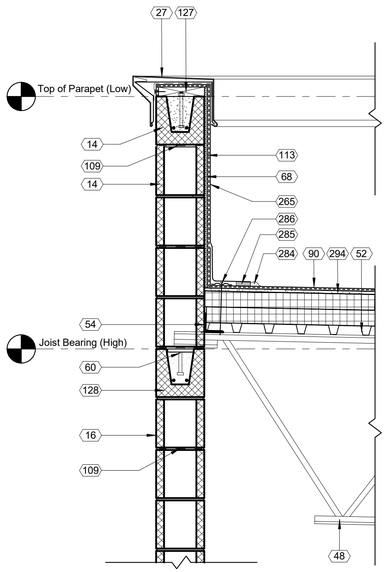

5 DT_A302 Roof at Parapet (High) Standard
1" = 1'-0"

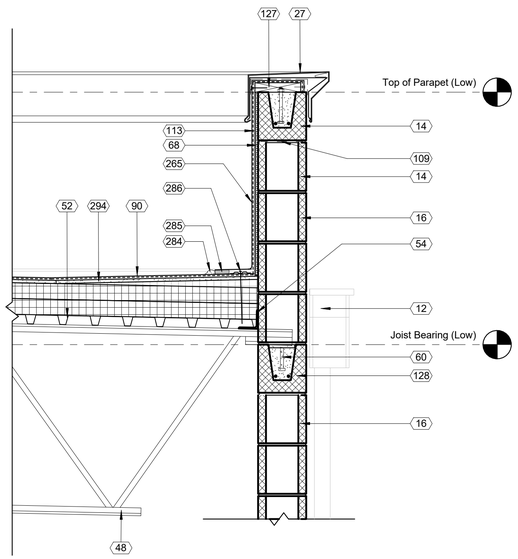

4 DT_A302 Roof at Parapet (Low) Standard
1" = 1'-0"

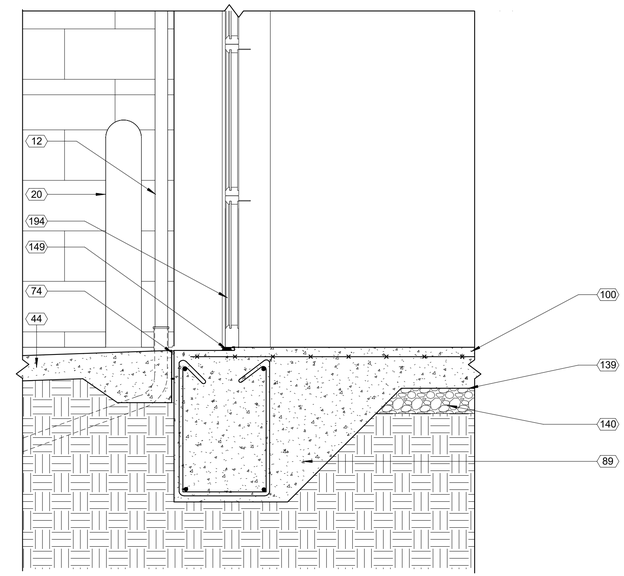

3 DT_Sheet A302_Slab on Grade @ OH Door with piped downspouts
1" = 1'-0"

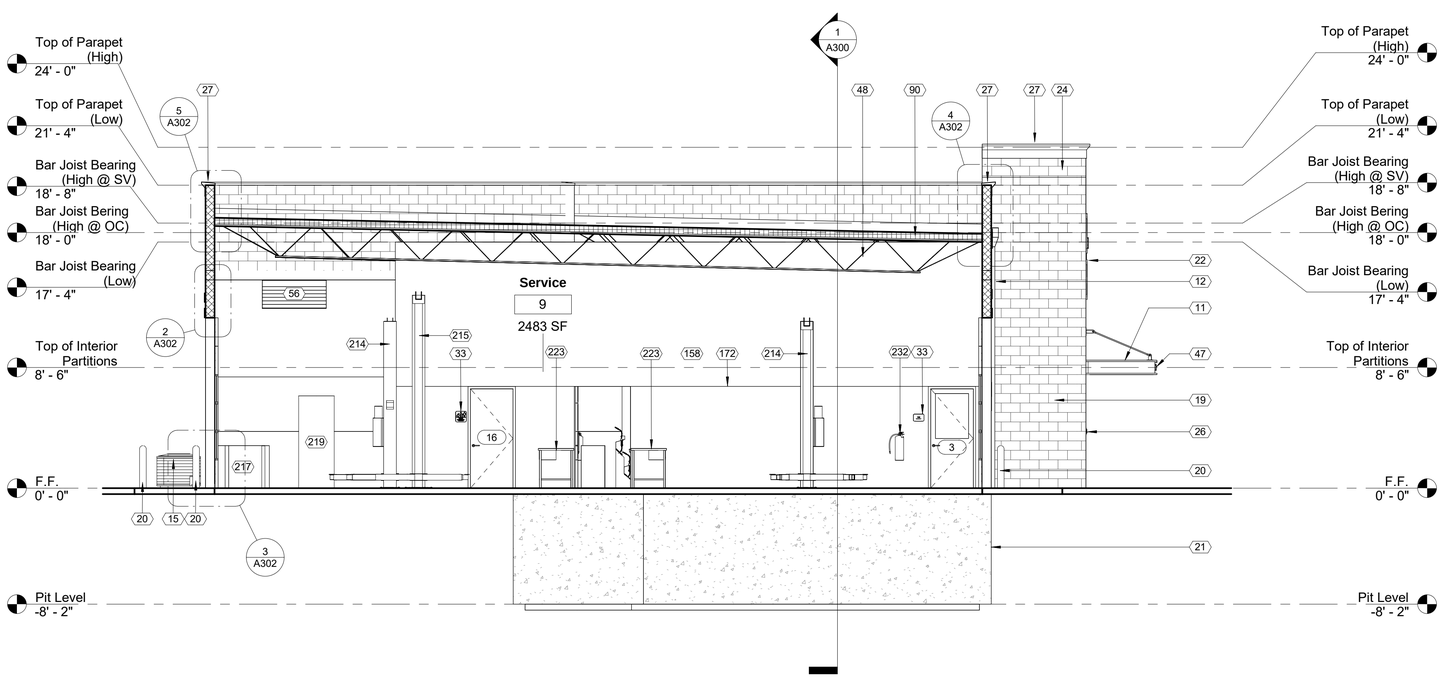

1 Building Section 3
3/16" = 1'-0"

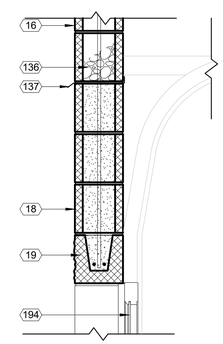

2 DT_Sheet A302_OH Door Head Detail
1" = 1'-0"

Keynote Schedule

Tag	Text
11	Pre-finished metal canopy. See Details.
12	Pre-finished metal conductor head with built-in overflow and downspout. Boot piped to storm drainage system unless otherwise indicated to discharge at grade. If discharging at grade, provide a pre-finished elbow and concrete splash block. See Civil for tie-in. See Specification 077100 Roof Specialties.
14	Painted smooth-face CMU (bond beam where indicated; see Structural). See Specification 042200 Concrete Unit Masonry. Color as indicated on Finish Schedule.
15	HVAC condensing unit. See Mechanical.
16	Painted smooth-face CMU. See Specification 042200 Concrete Unit Masonry. Color as indicated on Finish Schedule.
18	Painted smooth-face CMU. See Specification 042200 Concrete Unit Masonry. Color as indicated on Finish Schedule.
19	Painted split-face CMU (bond beam where indicated; see Structural). See Specification 042200 Concrete Unit Masonry. Color as indicated on Finish Schedule.
20	4" diameter painted concrete-filled steel pipe bollard. Color as indicated on Finish Schedule. Paint embedded portion of bollard. Use primer and two finish coats. See Details. See Specification 055000 Metal Fabrications.
21	Cast-in-place concrete wall. See Structural. Membrane waterproofing at perimeter of foundation wall as specified. See Specification 334600 Subdrainage.
22	Signage (By Others). See Electrical.
24	Painted split-face CMU (bond beam where indicated; see Structural). See Specification 042200 Concrete Unit Masonry. Color as indicated on Finish Schedule.
26	Fire Department Lock Box. Locate as directed by the Local Fire Marshal or AHJ. See Specification 104413 Fire Department Lock Box.
27	Pre-finished metal coping at exposed tops only over self-adhered membrane flashing and pressure treated wood blocking. Slope to drain. Color as indicated on Finish Schedule.
33	ADA compliant room / exit sign. See Details.
44	Concrete apron as required. Slope away from building with 3% slope. See Civil.
47	Provide address identification as directed by the Local Fire Marshal or AHJ.
48	Bar joist. See Structural.
52	Galvanized metal roof deck. See Structural.
54	Steel angle. See Structural.
56	Metal louver or vent. Color to match adjacent surface. See Mechanical.
60	Steel plate with headed studs. See Structural.
68	1/2" exterior plywood sheathing.
74	1/2" expansion joint with backer rod and sealant.
89	Concrete foundation. See Structural.
90	Fully adhered TPO membrane roofing installed per manufacturer's written instructions. See Specification 075423 Thermoplastic Polyolefin (TPO) Roofing.
100	Concrete slab. See Structural.
109	Horizontal joint reinforcement at 16" o.c. vertical.
113	Fluid applied vapor permeable air barrier. See Specification 072726 Fluid Applied Membrane Air Barrier.
127	2x pressure treated wood nailer.
128	Painted smooth-face 8" concrete-filled "U" block bond beam. Condition varies. See Structural.
136	Pea gravel above through wall flashing.
137	Flashing between first and second course to utilize BlockFlash. In addition to the pea gravel specified. Provide a drainage mat in open masonry cell directly above the BlockFlash pan.
139	10 mil vapor barrier. See Specification 072600 Vapor Retarders.
140	Porous fill. See Geotechnical Report.
149	1/2" recess at scheduled door. See Structural.
158	Vinyl letters (By Others).
172	Ensure paint line occurs at top of door and window frames. Ensure all openings, alcoves and windows align with top of door frame. Typical in Oil and Service Bays.
194	Scheduled door. See plans for details.
214	10K Lift (By Others).
215	12K Lift (By Others).
217	Wheel balancer (By Others).
219	Air compressor (By Others).
223	Work bench (By Others).
232	Bracket mounted fire extinguisher. Provide sign at all fire extinguisher locations which may be visually obstructed. See Details.
265	TPO membrane turned vertically up the wall and fastened to wood blocking at top roof curb, or top of wall framing per detail. Adhere TPO membrane to wall substrate with manufacturer approved bonding adhesive.
284	Cut edge sealant at TPO roof membrane flashing.
285	Hot air weld at TPO membrane and membrane flashing.
286	Fastener and seam fastening plate.
294	½" cover board mechanically attached over polyisocyanurate insulation board (See TPO Spec for required R-value).

AHO ARCHITECTS
a sole proprietorship
www.ahoarch.com

TIMOTHY ARNOLD AHO
REGISTERED
NO. 9084
COMMONWEALTH OF KENTUCKY
ARCHITECT
10/04/2024

Express Oil Change & Tire Engineers

Single Building / Right Hand Oil Change / Front Enter / Side Tire Storage

Morehead, Kentucky

FINAL

No.	Description	Date

2024
© Aho Architects, a sole proprietorship
All Rights Reserved.

Building Sections

Project number	24029
Date	10/04/2024
Drawn by	ARC
Checked by	N/A

A302

Scale As indicated

10/8/2024 3:56:15 PM

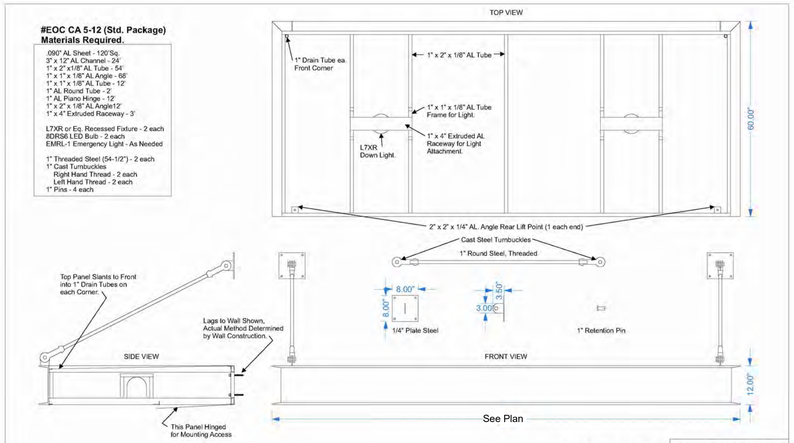

This drawing is generic. See elevations and plans for actual dimensions and features.

Delegated Designs: **Engage a qualified, professional engineer to design canopy and attachment and provide sealed shop drawings.**

#EOC CA 5-XX(EM)

Canvas Products of Dothan
209 Southgate Rd.Dothan AL 36301
1-800-447-7068

EXPRESS OIL CHANGE / TIRE ENGINEERS ENTRANCE CHANNEL AWNING WITH DOWN LIGHTS XX is Length Dimension. EM is Emergency Light.

2 DT_Sheet A303_Awning Details
N.T.S.

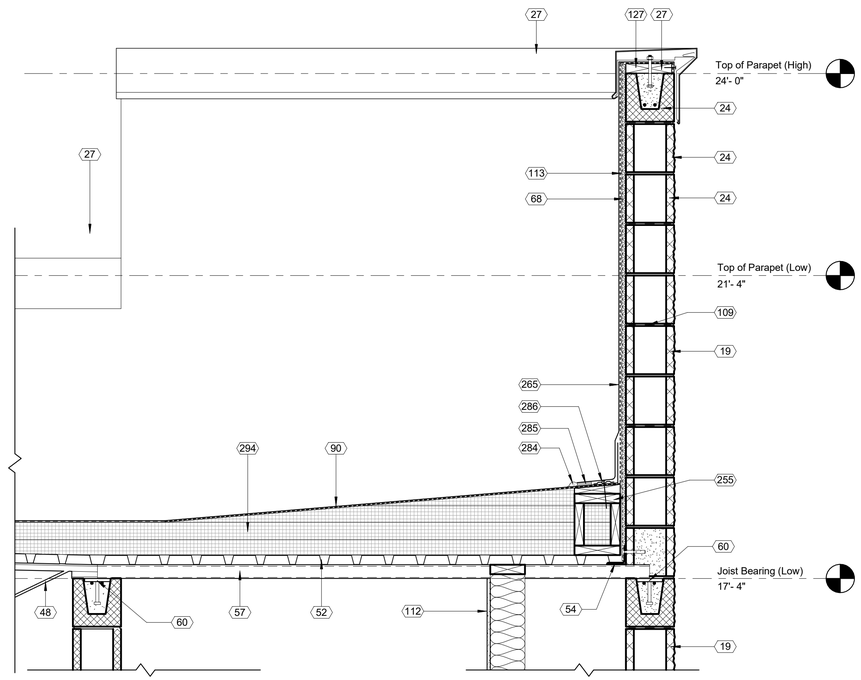

4 DT_Sheet A303_Section at Entry
1" = 1'-0"

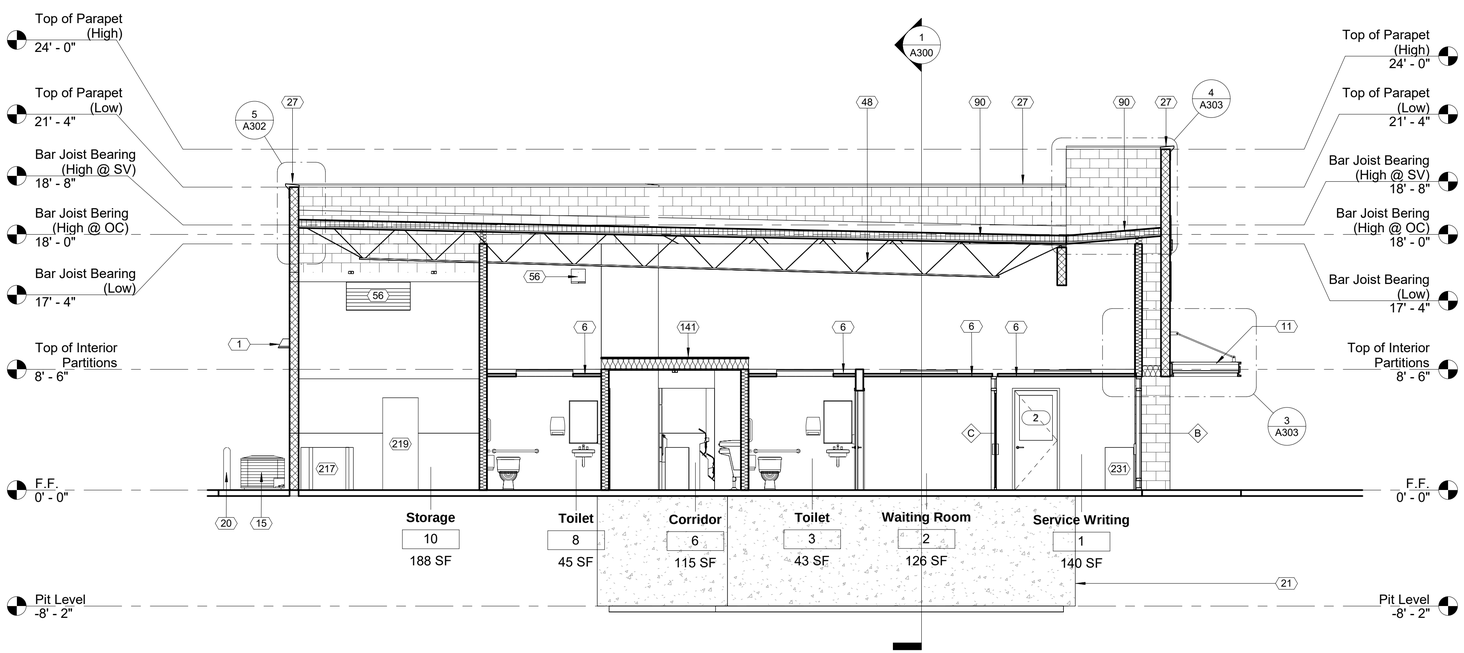

1 Building Section 4
3/16" = 1'-0"

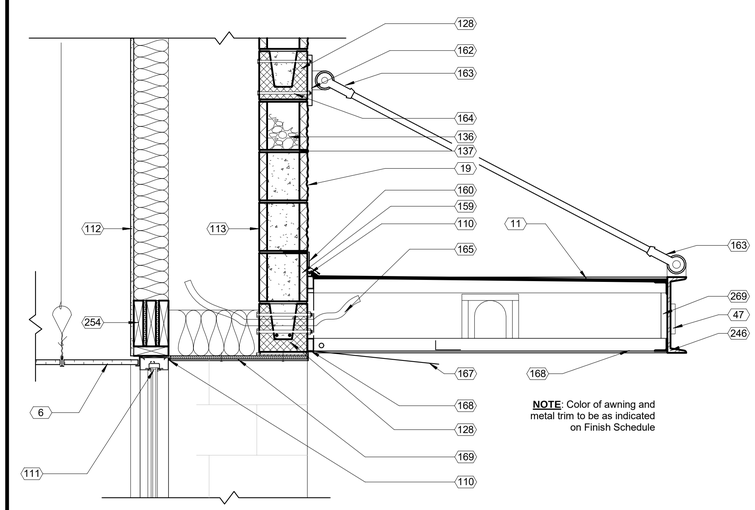

3 DT_Sheet A303_Awning Section
1" = 1'-0"

Keynote Schedule

Tag	Text
1	Wall pack. See Electrical.
6	Lay-in acoustical ceiling tile and grid, supported from structure.
11	Pre-finished metal canopy. See Details.
15	HVAC condensing unit. See Mechanical.
19	Painted split-face CMU (bond beam where indicated; see Structural). See Specification 042200 Concrete Unit Masonry. Color as indicated on Finish Schedule.
20	4" diameter painted concrete-filled steel pipe bollard. Color as indicated on Finish Schedule. Paint embedded portion of bollard. Use primer and two finish coats. See Details. See Specification 055000 Metal Fabrications.
21	Cast-in-place concrete wall. See Structural. Membrane waterproofing at perimeter of foundation wall as specified. See Specification 334600 Subdrainage.
24	Painted split-face CMU (bond beam where indicated; see Structural). See Specification 042200 Concrete Unit Masonry. Color as indicated on Finish Schedule.
27	Pre-finished metal coping at exposed tops only over self-adhered membrane flashing and pressure treated wood blocking. Slope to drain. Color as indicated on Finish Schedule.
47	Provide address identification as directed by the Local Fire Marshal or AHJ.
48	Bar joist. See Structural.
52	Galvanized metal roof deck. See Structural.
54	Steel angle. See Structural.
56	Metal louver or vent. Color to match adjacent surface. See Mechanical.
57	Joist extension. See Structural.
60	Steel plate with headed studs. See Structural.
68	1/2" exterior plywood sheathing.
90	Fully adhered TPO membrane roofing installed per manufacturer's written instructions. See Specification 075423 Thermoplastic Polyolefin (TPO) Roofing.
109	Horizontal joint reinforcement at 16" o.c. vertical.
110	Sealant with backer rod.
111	Aluminum storefront with insulated glazing. See Details.
112	Painted 1/2" gypsum board on 2x6 wood studs at 16" o.c. with kraft-face R-20 batt insulation (kraft in contact with gypsum board). See Details.
113	Fluid applied vapor permeable air barrier. See Specification 072726 Fluid Applied Membrane Air Barrier.
127	2x pressure treated wood nailer.
128	Painted smooth-face 8" concrete-filled "U" block bond beam. Condition varies. See Structural.
136	Pea gravel above through wall flashing.
137	Flashing between first and second course to utilize BlockFlash. In addition to the pea gravel specified. Provide a drainage mat in open masonry cell directly above the BlockFlash pan.
141	3/4" tongue and groove plywood on 2x10 wood joists. Provide R-38 batt kraft face insulation in between joists. Kraft face in contact with gypsum board.
159	Painted smooth-face grout-filled CMU where canopy attaches to wall construction. See Structural.
160	Pre-finished aluminum flashing to match color of canopy. Turn out onto canopy.
162	Pre-finished 8"x8"x1/4" steel plate anchored to wall using through wall fasteners by Canopy manufacturer's designated design.
163	Pre-finished 1" cast steel turnbuckle with 1" threaded steel rod and 1" pins.
164	Anchor canopy to wall using through wall fasteners by Canopy manufacturer's designated design.
165	Provide a 1" flexible conduit extending 12" beyond the face of the wall for canopy lighting. See Electrical.
167	Pre-finished hinged panel for mounting access. Color to match canopy.
168	1"x2" aluminum tube. Typical.
169	Pre-finished metal over 1/2" pressure treated plywood. Terminate at aluminum storefront. Turn up pre-finished metal 1" at edge where metal meets canopy. Secure panel to plywood with fasteners compatible with type and color of metal being used.
217	Wheel balancer (By Others).
219	Air compressor (By Others).
231	Beverage refrigerator (By Others).
246	3"x12" aluminum channel.
254	2x wood framing at opening.
255	2x pressure treated wood blocking.
265	TPO membrane turned vertically up the wall and fastened to wood blocking at top roof curb, or top of wall framing per detail. Adhere TPO membrane to wall substrate with manufacturer approved bonding adhesive.
269	1" drain tube beyond. Slope top panel of canopy toward the drain tube at the front of the canopy.
284	Cut edge sealant at TPO roof membrane flashing.
285	Hot air weld at TPO membrane and membrane flashing.
286	Fastener and seam fastening plate.
294	½" cover board mechanically attached over polyisocyanurate insulation board (See TPO Spec for required R-value).

AHO ARCHITECTS
a sole proprietorship
www.ahoarch.com

TIMOTHY ARNOLD AHO
REGISTERED
NO. 9084
COMMONWEALTH OF KENTUCKY
ARCHITECT
10/04/2024

Express Oil Change & Tire Engineers

Single Building / Right Hand Oil Change / Front Enter / Side Tire Storage

Morehead, Kentucky

FINAL

No.	Description	Date

© 2024 Aho Architects, a sole proprietorship All Rights Reserved.

Building Sections

Project number	24029
Date	10/04/2024
Drawn by	ARC
Checked by	N/A

A303

Scale As indicated

10/8/2024 3:56:18 PM

E1

Refer to structural drawings for reinforcing and other information

Install all waterproofing per manufacturer's recommendations.

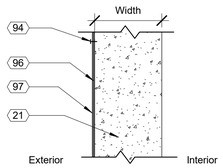

Wall Type No.	Description	Width	Ref Test
E1	As shown	See Struct.	-

E2

Refer to structural drawings for reinforcing, grouting, and other information

Install siloxane on the exterior side of wall construction

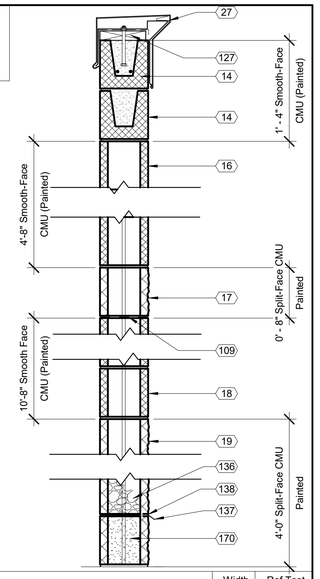

Wall Type No.	Description	Width	Ref Test
E2	As shown	7 5/8"	-

E3

Refer to structural drawings for reinforcing and other information

Install siloxane on the exterior side of wall construction

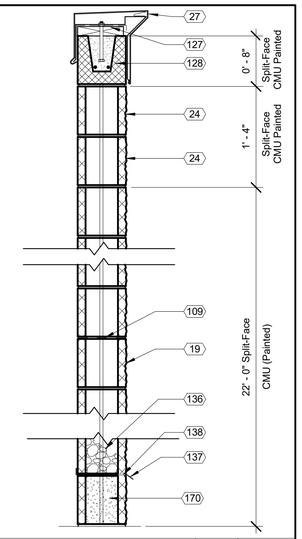

Wall Type No.	Description	Width	Ref Test

E5

Refer to structural drawings for reinforcing, grouting, and other information

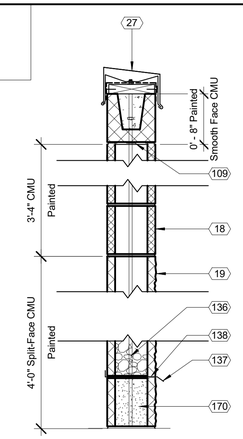

Wall Type No.	Description	Width
E5	As shown	7 5/8"
E5a	As shown, except without coping and painted CMU to roof. See Elevations on A101.	7 5/8"

I1

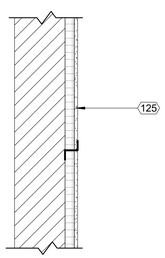

Wall Type No.	Description	Width	Ref Test
I1	As shown	10"	-

I2

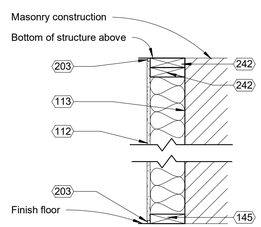

Wall Type No.	Description	Width	Ref Test
I2	As shown	6"	-

I3

Note: Stagger electrical outlet boxes, switches, etc. Seal around all penetrations in wall with acoustical sealant.

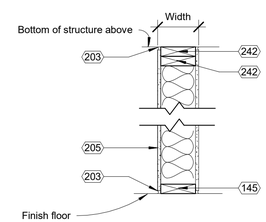

Wall Type No.	Description	Width	Ref Test
I3	As shown	6 1/2"	-

I4

Refer to structural drawings for reinforcing and other information

Seal all pentrations with fire caulk

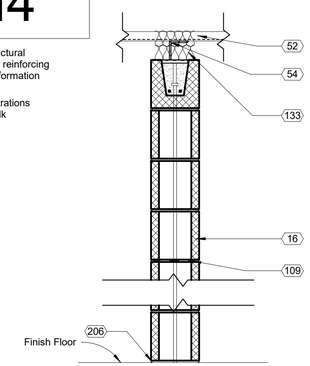

Wall Type No.	Description	Width	Ref Test
I4	As shown - Full Height	7 5/8"	U905/U305

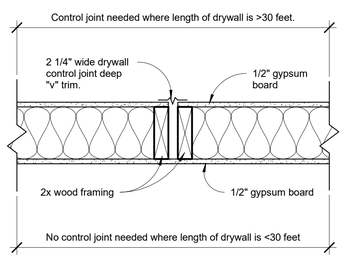

1 DT_Sheet A400_Gypsum Board Control Joint
1 1/2" = 1'-0"

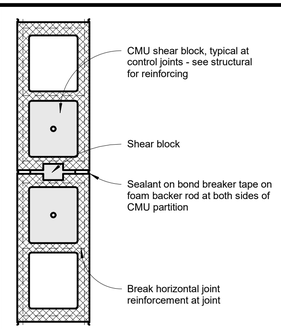

2 DT_Sheet A400_Masonry Control Joint
1 1/2" = 1'-0"

*Detail also applies to inside corners of masonry where indicated on the exterior elevations

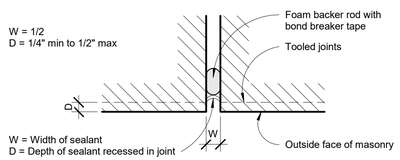

3 DT_Sheet A400_Sealant Detail
6" = 1'-0"

Keynote Schedule

Tag	Text
14	Painted smooth-face CMU (bond beam where indicated; see Structural). See Specification 042200 Concrete Unit Masonry. Color as indicated on Finish Schedule.
16	Painted smooth-face CMU. See Specification 042200 Concrete Unit Masonry. Color as indicated on Finish Schedule.
17	Painted split-face CMU (bond beam where indicated; see Structural). See Specification 042200 Concrete Unit Masonry. Color as indicated on Finish Schedule.
18	Painted smooth-face CMU. See Specification 042200 Concrete Unit Masonry. Color as indicated on Finish Schedule.
19	Painted split-face CMU (bond beam where indicated; see Structural). See Specification 042200 Concrete Unit Masonry. Color as indicated on Finish Schedule.
21	Cast-in-place concrete wall. See Structural. Membrane waterproofing at perimeter of foundation wall as specified. See Specification 334600 Subdrainage.
24	Painted split-face CMU (bond beam where indicated; see Structural). See Specification 042200 Concrete Unit Masonry. Color as indicated on Finish Schedule.
27	Pre-finished metal coping at exposed tops only over self-adhered membrane flashing and pressure treated wood blocking. Slope to drain. Color as indicated on Finish Schedule.
52	Galvanized metal roof deck. See Structural.
54	Steel angle. See Structural.

Keynote Schedule

Tag	Text
94	Fasteners at 12" max o.c. for securing subdrainage to pit wall. Follow manufacturer's installation instructions.
96	CCW MiraClay woven geotextile against wall/slab.
97	CCW MiraDrain 6200.
109	Horizontal joint reinforcement at 16" o.c. vertical.
112	Painted 1/2" gypsum board on 2x6 wood studs at 16" o.c. with kraft-face R-20 batt insulation (kraft in contact with gypsum board). See Details.
113	Fluid applied vapor permeable air barrier. See Specification 072726 Fluid Applied Membrane Air Barrier.
125	1/2" painted gypsum board over rigid insulation secured to z-clips over 8" smooth-face CMU.
127	2x pressure treated wood nailer.
128	Painted smooth-face 8" concrete-filled "U" block bond beam. Condition varies. See Structural.
133	Firestop safing.
136	Pea gravel above through wall flashing.
137	Flashing between first and second course to utilize BlockFlash. In addition to the pea gravel specified. Provide a drainage mat in open masonry cell directly above the BlockFlash pan.
138	Drainable weeps at every third mortar joint.
145	2x pressure treated wood sill plate.
170	Fill first course of CMU with grout.
203	Acoustical sealant and backer rod. See Specification 079219 Acoustical Joint Sealants.
205	1 layer of 1/2" painted gypsum board on both sides of 2"x6" wood studs at 16" o.c. Infill with kraft-faced R-20 batt insulation. Kraft in contact with gypsum board.
206	Fire caulk both sides. Typical. See Specification 078443 Joint Firestopping.
242	2x pressure treated wood top plate.

AHO ARCHITECTS
a sole proprietorship
www.ahoarch.com

TIMOTHY ARNOLD AHO REGISTERED NO. 9084 COMMONWEALTH OF KENTUCKY ARCHITECT
10/04/2024

Express Oil Change & Tire Engineers

Single Building / Right Hand Oil Change / Front Enter / Side Tire Storage

Morehead, Kentucky

FINAL

No.	Description	Date

2024
© Aho Architects, a sole proprietorship
All Rights Reserved.

Wall Types

Project number	24029
Date	10/04/2024
Drawn by	ARC
Checked by	N/A

A400

Scale	As indicated

10/8/2024 3:56:20 PM

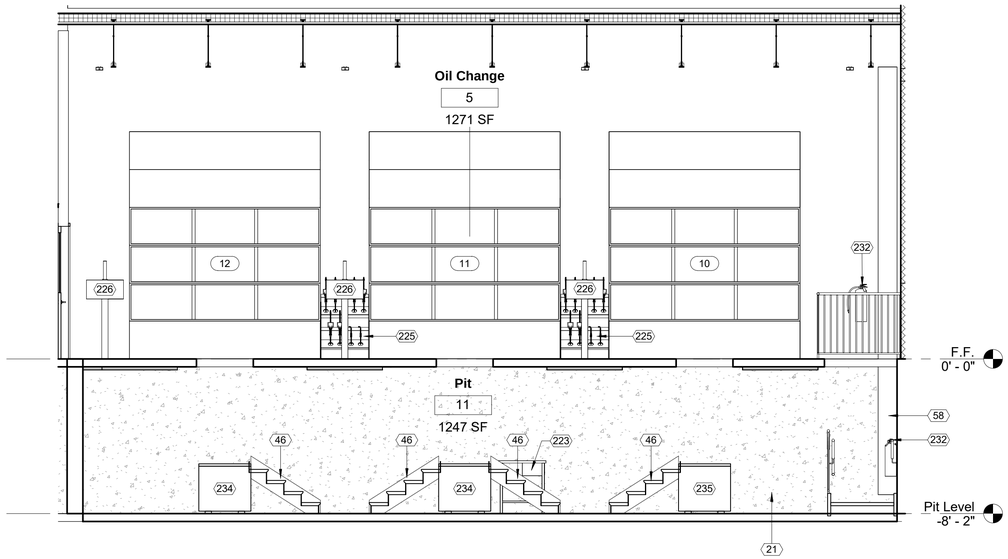

1 Oil Change_Interior Elevation A
1/4" = 1'-0"

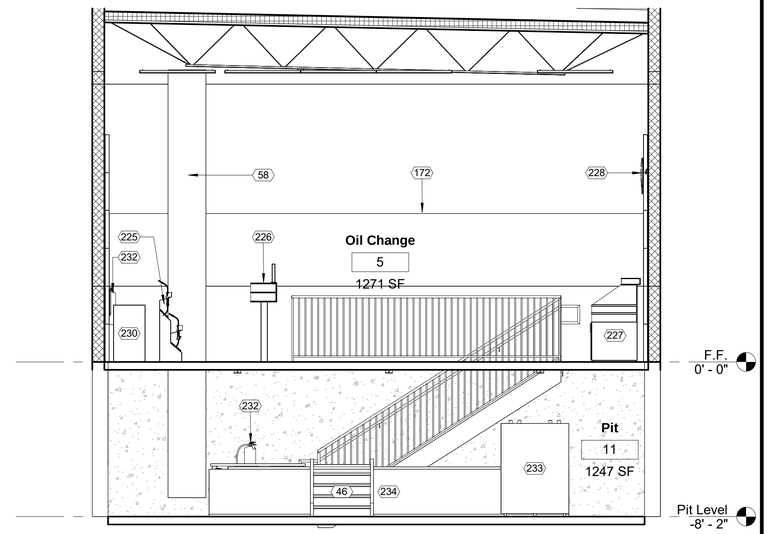

2 Oil Change_Interior Elevation B
1/4" = 1'-0"

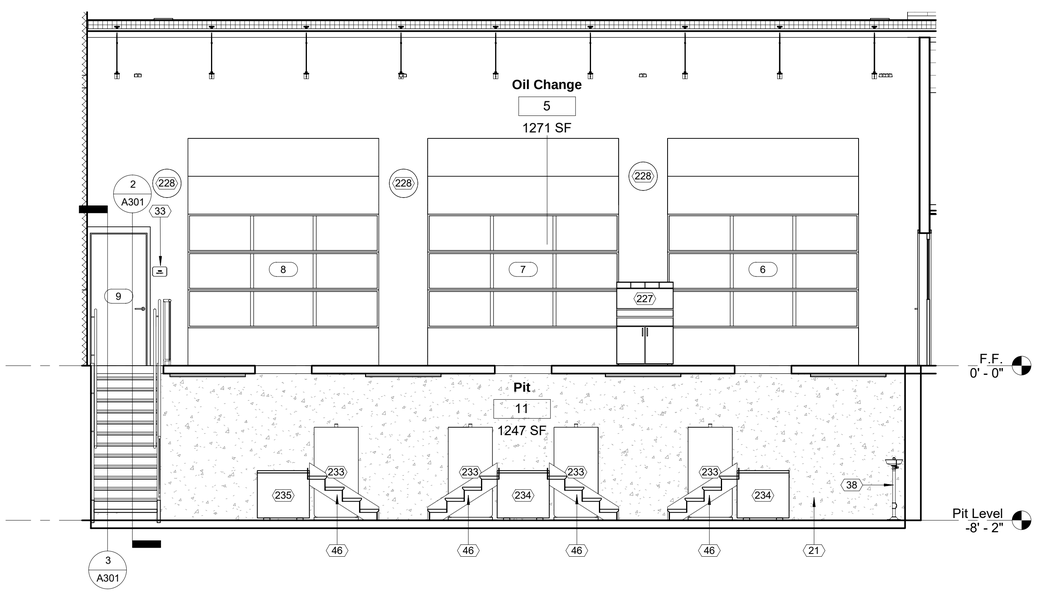

3 Oil Change_Interior Elevation C
1/4" = 1'-0"

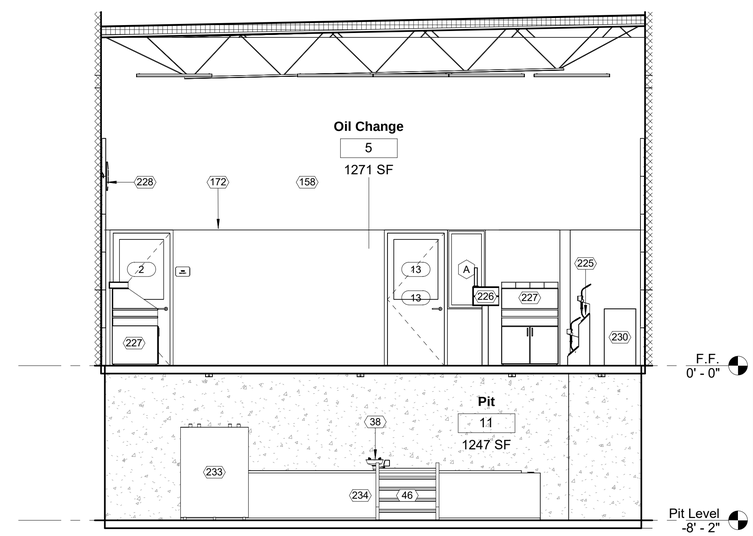

4 Oil Change_Interior Elevation D
1/4" = 1'-0"

Keynote Schedule

Tag	Text
21	Cast-in-place concrete wall. See Structural. Membrane waterproofing at perimeter of foundation wall as specified. See Specification 334600 Subdrainage.
33	ADA compliant room / exit sign. See Details.
38	Eyewash station. See Plumbing.
46	Oil tank stairs (By Others).
58	Verify location and size of pit exhaust opening with Structural and Mechanical drawings.
158	Vinyl letters (By Others).
172	Ensure paint line occurs at top of door and window frames. Ensure all openings, alcoves and windows align with top of door frame. Typical in Oil and Service Bays.
223	Work bench (By Others).
225	Lube console (By Others).
226	Computer podium (By Others).
227	Cashier computer station (By Others).
228	Convex mirrors (By Others).
230	Tool cart (By Others).
232	Bracket mounted fire extinguisher. Provide sign at all fire extinguisher locations which may be visually obstructed. See Details.
233	275-gallon Class IIIB new oil tank (By Others).
234	928-gallon Class IIIB new oil tank (By Others). Provide a 2" concrete walkway cap with non-slip surface over (oil tank By Others). Coordinate with equipment supplier prior to installation.
235	928-gallon Class IIB waste oil tank (By Others). Provide a 2" concrete walkway cap with non-slip surface over (oil tank By Others). Coordinate with equipment supplier prior to installation.

AHO ARCHITECTS
a sole proprietorship
www.ahoarch.com

Express Oil Change & Tire Engineers

Single Building / Right Hand Oil Change / Front Enter / Side Tire Storage

Morehead, Kentucky

FINAL

No.	Description	Date

2024
© Aho Architects, a sole proprietorship
All Rights Reserved.

Interior Elevations

Project number	24029
Date	10/04/2024
Drawn by	ARC
Checked by	N/A

A600

Scale 1/4" = 1'-0"

10/8/2024 3:56:25 PM

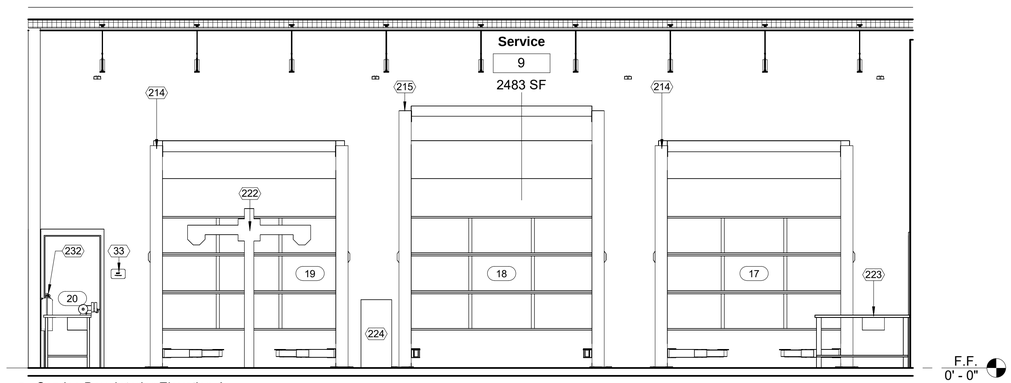

1 Service Bay_Interior Elevation A
1/4" = 1'-0"

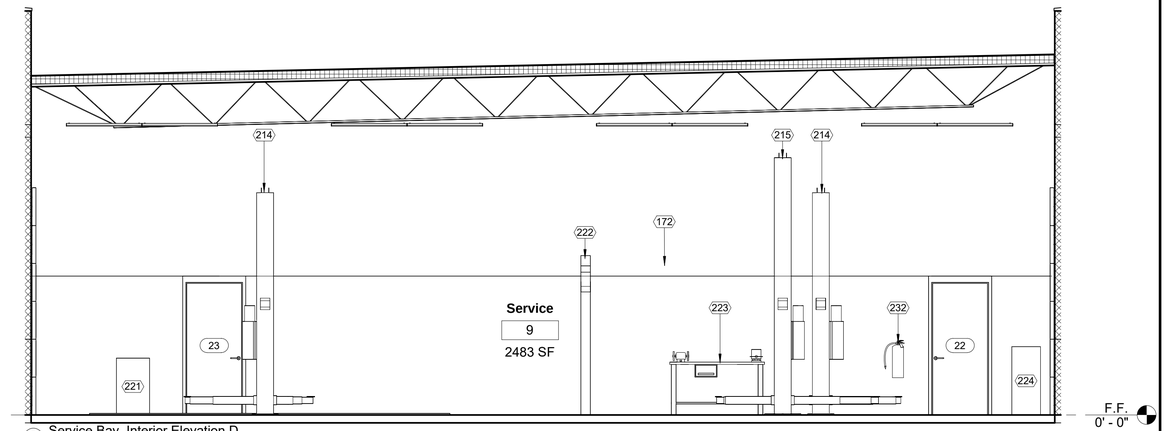

2 Service Bay_Interior Elevation D
1/4" = 1'-0"

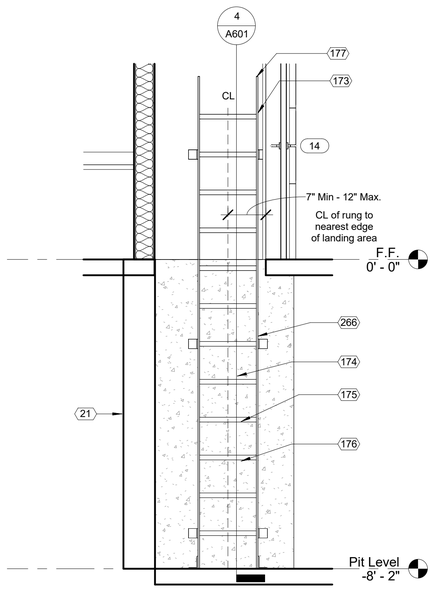

3 Pit Ladder Elevation
1/2" = 1'-0"

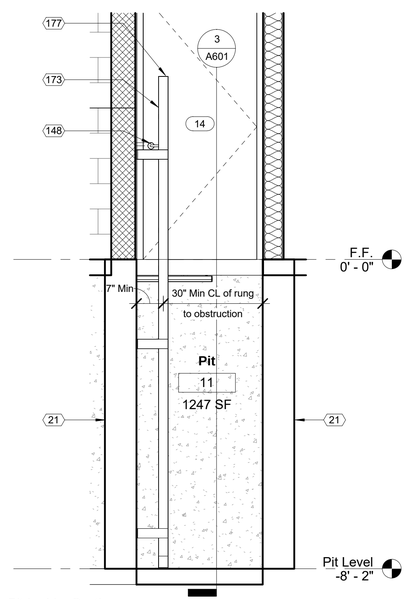

4 Pit Ladder Section
1/2" = 1'-0"

Keynote Schedule

Tag	Text
21	Cast-in-place concrete wall. See Structural. Membrane waterproofing at perimeter of foundation wall as specified. See Specification 334600 Subdrainage.
33	ADA compliant room / exit sign. See Details.
56	Metal louver or vent. Color to match adjacent surface. See Mechanical.
148	Latch side of door to be located on side nearest the wall mounted ladder.
158	Vinyl letters (By Others).
172	Ensure paint line occurs at top of door and window frames. Ensure all openings, alcoves and windows align with top of door frame. Typical in Oil and Service Bays.
173	Pit ladder to comply fully with OSHA 1910.23 and 1926.1053.
174	Rungs shall be capable of supporting a single concentrated load of at least 250 lbs. applied to the middle of the rung.
175	Rungs shall be corrugated, knurled, dimpled, coated with skid-resistant material or otherwise treated to minimize slipping.
176	Rungs to be uniformly spaced 10" min. to 14" max. as measured between centerline of rungs.
177	Extend ladder above landing surface to ensure proper grip.
214	10K Lift (By Others).
215	12K Lift (By Others).
217	Wheel balancer (By Others).
220	Scissor lift alignment (By Others).
221	Scissor lift alignment console (By Others). Provide conduit in slab as required. See alignment lift specifications (By Others).
222	Alignment scarecrow (By Others).
223	Work bench (By Others).
224	Strut compressor (By Others).
232	Bracket mounted fire extinguisher. Provide sign at all fire extinguisher locations which may be visually obstructed. See Details.
266	Pit ladder to be painted P-5 Safety Yellow.

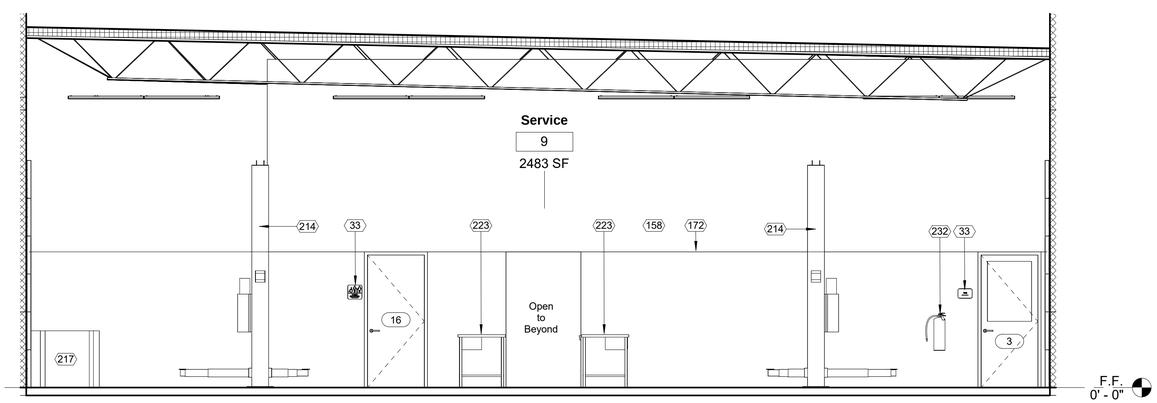

5 Service Bay_Interior Elevation B
1/4" = 1'-0"

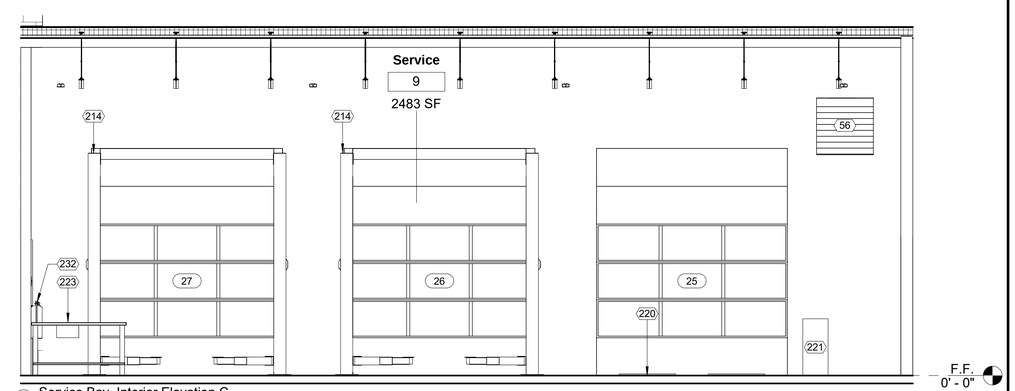

6 Service Bay_Interior Elevation C
1/4" = 1'-0"

AHO ARCHITECTS
a sole proprietorship
www.ahoarch.com

TIMOTHY ARNOLD AHO
REGISTERED
NO. 9084
COMMONWEALTH OF KENTUCKY
ARCHITECT
10/04/2024

Express Oil Change & Tire Engineers

Single Building / Right Hand Oil Change / Front Enter / Side Tire Storage

Morehead, Kentucky

FINAL

No.	Description	Date

© 2024
Aho Architects, a sole proprietorship
All Rights Reserved.

Interior Elevations

Project number	24029
Date	10/04/2024
Drawn by	ARC
Checked by	N/A

A601

Scale As indicated

10/8/2024 3:56:29 PM

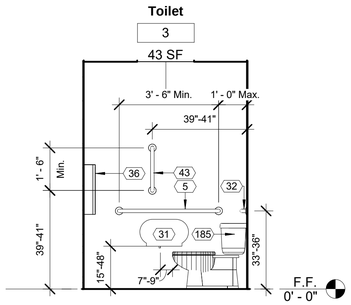

1 Toilet #3_Interior Elevation A
3/8" = 1'-0"

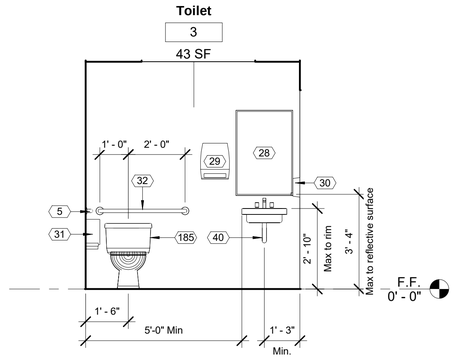

2 Toilet #3_Interior Elevation B
3/8" = 1'-0"

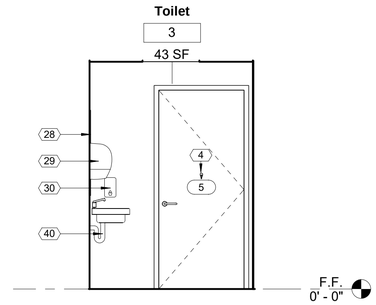

3 Toilet #3_Interior Elevation C
3/8" = 1'-0"

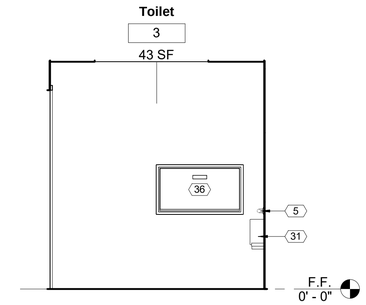

4 Toilet #3_Interior Elevation D
3/8" = 1'-0"

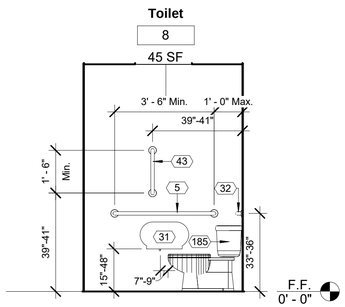

5 Toilet #8_ Interior Elevation A
3/8" = 1'-0"

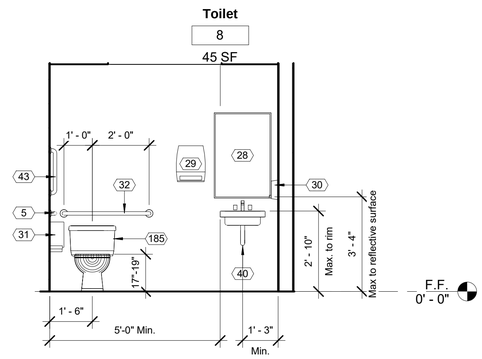

6 Toilet #8_Interior Elevation B
3/8" = 1'-0"

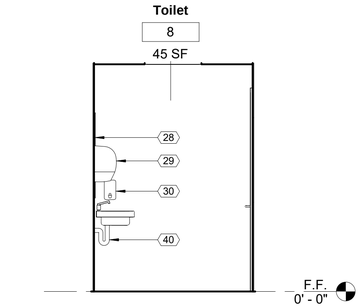

7 Toilet #8_Interior Elevation C
3/8" = 1'-0"

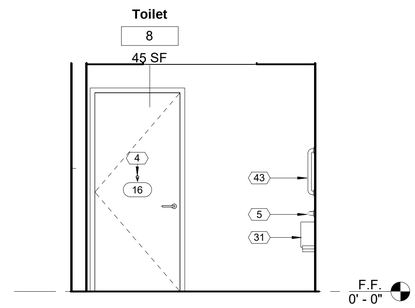

8 Toilet #8_Interior Elevation D
3/8" = 1'-0"

Signage shall comply with Section 703 of the 2017 ICC/ANSI A117.1

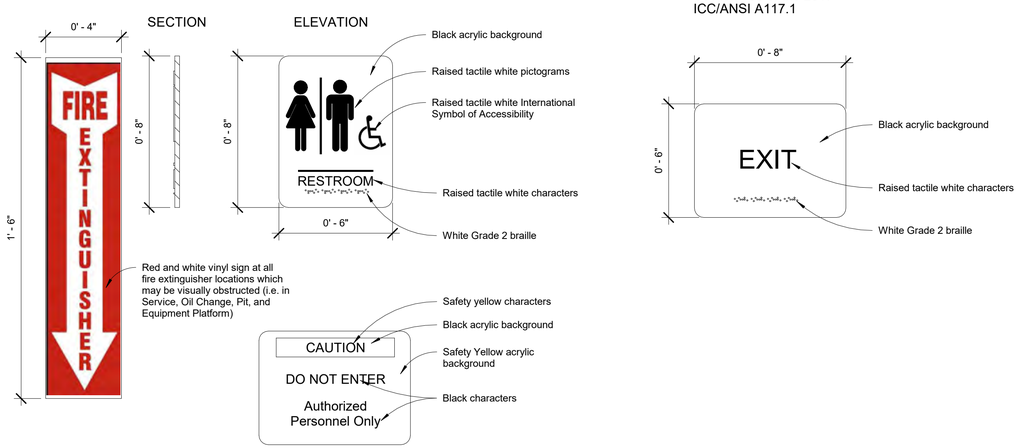

9 DT_Sheet A602_Signage @ OC Building
3" = 1'-0"

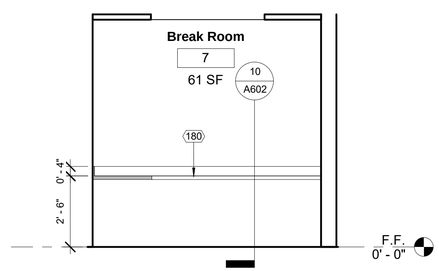

12 Break Room_Interior Elevation A
3/8" = 1'-0"

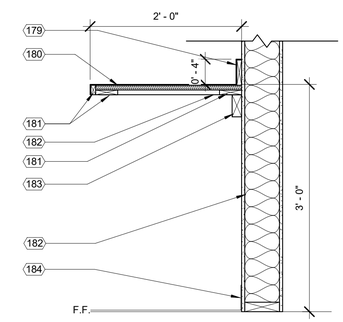

10 DT_Sheet A602_Countertop Section @ Wall
1" = 1'-0"

Keynote Schedule

Tag	Text
4	Robe hook mounted at 48" A.F.F. See Specification 102800 Toilet, Bath, and Laundry Accessories.
5	42" grab bar with blocking in walls as required. See Specification 102800 Toilet, Bath, and Laundry Accessories.
28	Framed mirror. See Specification 102800 Toilet, Bath, and Laundry Accessories.
29	Automatic Towel Dispenser (By others). Provide blocking in wall as required. See Specification 102800 Toilet, Bath, and Laundry Accessories.
30	Wall mounted soap dispenser (By Others). Provide blocking in wall as required. See Specification 102800 Toilet, Bath, and Laundry Accessories.
31	Jumbo Dual Roll Toilet Tissue dispenser (By Others). Provide blocking in wall as required. See Specification 102800 Toilet, Bath, and Laundry Accessories.
32	36" grab bar with blocking in walls as required. See Specification 102800 Toilet, Bath, and Laundry Accessories.
36	Surface mounted baby changing station with blocking in walls as required. See Specification 102800 Toilet, Bath, and Laundry Accessories.
40	Under lavatory guard. See Specification 102800 Toilet, Bath, and Laundry Accessories.
43	24" vertical grab bar with blocking in walls as required. See Specification 102800 Toilet, Bath, and Laundry Accessories.
179	Plastic laminate over 1x wood blocking. See Specification 123623.13 Plastic-Laminate-Clad Countertops. See Finish Schedule for color.
180	Plastic laminate over 3/4" plywood. See Specification 123623.13 Plastic-Laminate-Clad Countertops. See Finish Schedule for color.
181	1x wood blocking.
182	Concealed countertop bracket.
183	2x wood cleat.
184	Finish base. See Specification Section 096513 Resilient Base Accessories. See Finish Schedule for color.
185	Flush valve on transfer side of water closet.

AHO ARCHITECTS
a sole proprietorship
www.ahoarch.com

Express Oil Change & Tire Engineers

Single Building / Right Hand Oil Change / Front Enter / Side Tire Storage

Morehead, Kentucky

FINAL

No.	Description	Date

2024
© Aho Architects, a sole proprietorship
All Rights Reserved.

Interior Elevations

Project number	24029
Date	10/04/2024
Drawn by	ARC
Checked by	N/A

A602

Scale As indicated

10/8/2024 3:56:31 PM

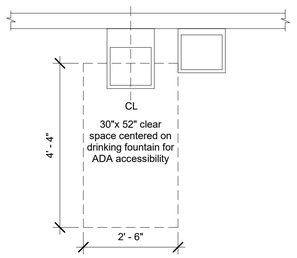

1 DT-Sheet A605_Drinking Fountain_Plan View
1/2" = 1'-0"

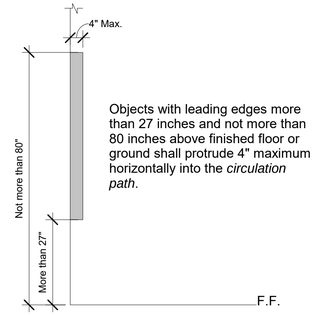

2 DT_Sheet A605_Limits of Protruding Objects
1/2" = 1'-0"

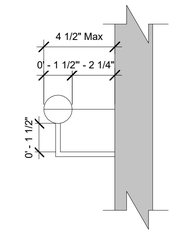

3 DT_Sheet A605_Handrail Detail
3" = 1'-0"

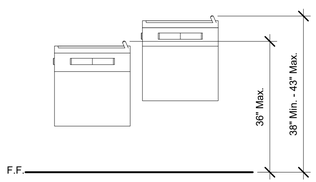

4 DT_Sheet A605_Drinking Fountain_Front View
1/2" = 1'-0"

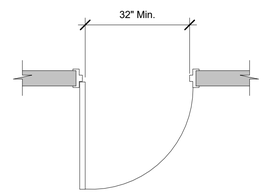

5 DT_Sheet A605_Clear Width @ Doorways
1/2" = 1'-0"

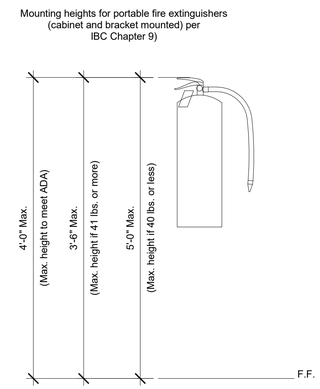

6 DT_Sheet A605_Fire Extinguisher Mounting Heights
1" = 1'-0"

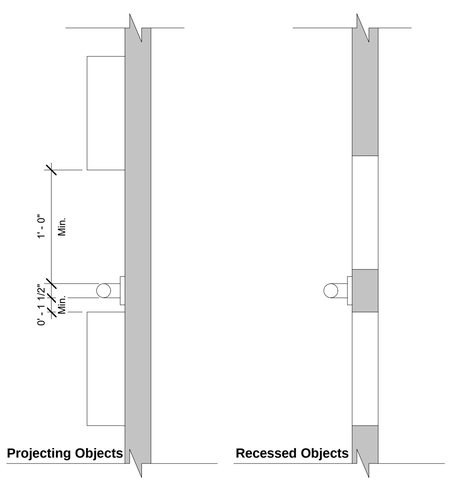

7 DT_Sheet A605_Spacing of Grab Bars
1 1/2" = 1'-0"

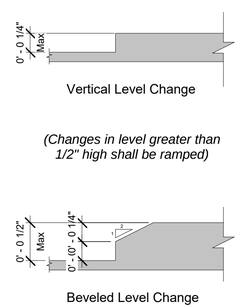

8 DT_Sheet A605_Level Change
12" = 1'-0"

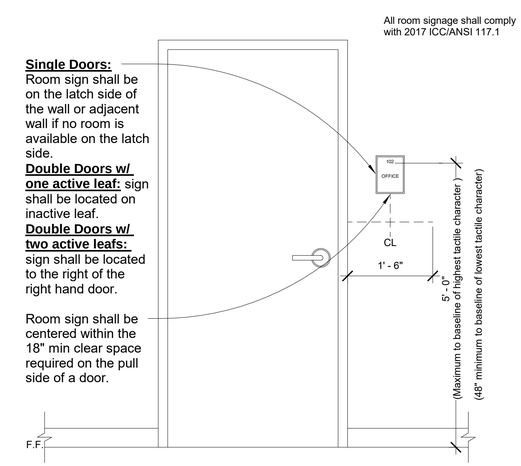

9 DT_Sheet A605_Signage Mounting Heights
3/4" = 1'-0"

AHO ARCHITECTS
a sole proprietorship
www.ahoarch.com

TIMOTHY ARNOLD AHO
REGISTERED
NO. 9084
COMMONWEALTH OF KENTUCKY
ARCHITECT
10/04/2024

Express Oil Change & Tire Engineers

Single Building / Right Hand Oil Change / Front Enter / Side Tire Storage

Morehead, Kentucky

FINAL

No.	Description	Date

2024
© Aho Architects, a sole proprietorship
All Rights Reserved.

Interior Dimensional Info.

Project number	24029
Date	10/04/2024
Drawn by	ARC
Checked by	N/A

A605

Scale	As indicated

10/8/2024 3:56:33 PM

FLOOR FINISH LEGEND

Sealed Concrete

Stonhard Flooring (By Others)

Safety Yellow Paint.

Keynote Schedule	
Tag	Text
41	Paint structural steel at openings P-5 Safety Yellow. Typical for all pit and stairwell openings.
55	Stainless steel corner guard. See Specification 102600 Wall and Door Protection.
187	Paint 12" P-5 Safety Yellow around pit openings. Verify paint is compatible with floor finish.

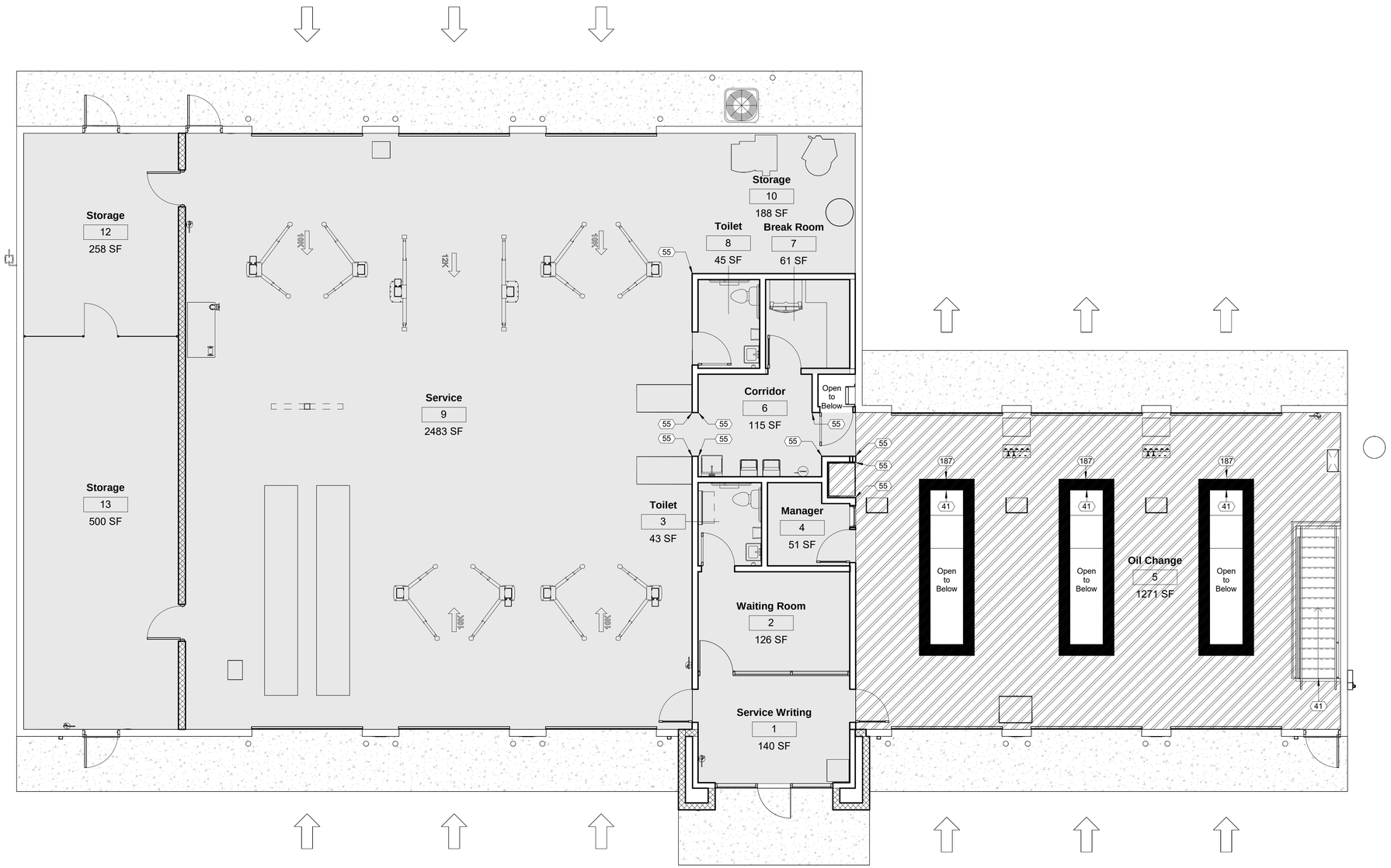

2 07_Floor Finish Plan_Main
3/16" = 1'-0"

AHO ARCHITECTS
a sole proprietorship
www.ahoarch.com

TIMOTHY ARNOLD AHO
REGISTERED
NO. 9084
COMMONWEALTH OF KENTUCKY
ARCHITECT
10/04/2024

Express Oil Change & Tire Engineers

Single Building / Right Hand Oil Change / Front Enter / Side Tire Storage

Morehead, Kentucky

FINAL

No.	Description	Date

2024
© Aho Architects, a sole proprietorship
All Rights Reserved.

Floor Finishes - Main

Project number	24029
Date	10/04/2024
Drawn by	ARC
Checked by	N/A

A610

Scale As indicated

10/8/2024 3:56:38 PM

FLOOR FINISH LEGEND

	Sealed Concrete
	Stonhard Flooring (By Others)
	Safety Yellow Paint.

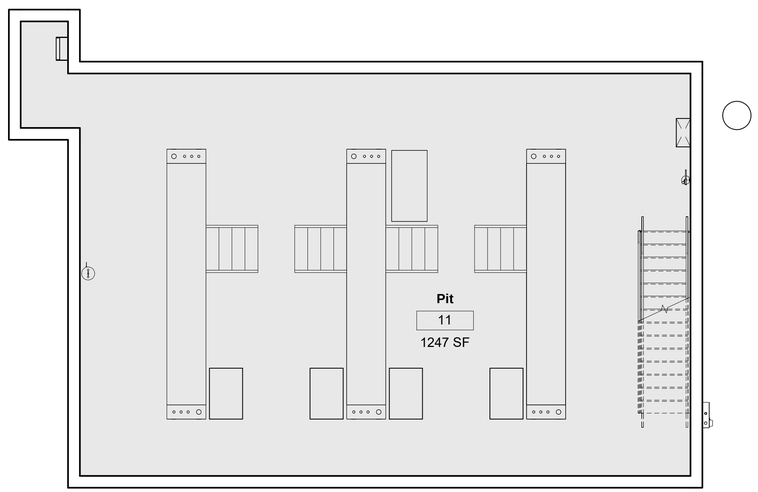

1 06_Floor Finish Plan_Pit
3/16" = 1'-0"

AHO ARCHITECTS
a sole proprietorship
www.ahoarch.com

TIMOTHY ARNOLD AHO
REGISTERED
NO. 9084
COMMONWEALTH OF KENTUCKY
ARCHITECT
10/04/2024

Express Oil Change & Tire Engineers

Single Building / Right Hand Oil Change / Front Enter / Side Tire Storage

Morehead, Kentucky

FINAL

No.	Description	Date

2024
© Aho Architects, a sole proprietorship
All Rights Reserved.

Floor Finishes - Pit

Project number	24029
Date	10/04/2024
Drawn by	ARC
Checked by	N/A

A611

Scale	As indicated

10/8/2024 3:56:39 PM

Door and Frame Schedule

Number	Door Width	Door Height	Door Thickness	Door Type	Door Material	Door Finish	Frame Type	Frame Material	Frame Finish	Glass	UL Label	Notes
1	3' - 0"	7' - 0"	0' - 1 3/4"	SF	Aluminum / Glass	Factory Finish	3	Aluminum	Factory Finish	Tempered		If required by the Fire Marshal or AHJ, add lettering that reads "This door must remain unlocked when business is occupied."
2	3' - 0"	7' - 0"	0' - 1 3/4"	FV	Wood / Glass	Painted	1	Hollow Metal	Painted	Tempered		
3	3' - 0"	7' - 0"	0' - 1 3/4"	FV	Wood / Glass	Painted	1	Hollow Metal	Painted	Tempered		
4	3' - 0"	7' - 0"	0' - 1 3/4"	SF	Aluminum / Glass	Factory Finish	3	Aluminum	Factory Finish	Tempered		
5	3' - 0"	7' - 0"	0' - 1 3/4"	F	Wood	Painted	1	Hollow Metal	Painted	N/A		
6	10' - 0"	12' - 0"	0' - 2 1/8"	OH	Aluminum / Glass	Factory Finish	N/A	N/A	Factory Finish	Tempered		
7	10' - 0"	12' - 0"	0' - 2 1/8"	OH	Aluminum / Glass	Factory Finish	N/A	N/A	Factory Finish	Tempered		
8	10' - 0"	12' - 0"	0' - 2 1/8"	OH	Aluminum / Glass	Factory Finish	N/A	N/A	Factory Finish	Tempered		
9	3' - 0"	7' - 0"	0' - 1 3/4"	F	Hollow Metal	Painted	2	Hollow Metal	Painted	N/A		
10	10' - 0"	12' - 0"	0' - 2 1/8"	OH	Aluminum / Glass	Factory Finish	N/A	N/A	Factory Finish	Tempered		
11	10' - 0"	12' - 0"	0' - 2 1/8"	OH	Aluminum / Glass	Factory Finish	N/A	N/A	Factory Finish	Tempered		
12	10' - 0"	12' - 0"	0' - 2 1/8"	OH	Aluminum / Glass	Factory Finish	N/A	N/A	Factory Finish	Tempered		
13	3' - 0"	7' - 0"	0' - 1 3/4"	FV	Wood / Glass	Painted	1	Hollow Metal	Painted	Tempered		
14	3' - 0"	7' - 0"	0' - 1 3/4"	F	Wood	Painted	1	Hollow Metal	Painted	N/A		
15	3' - 0"	7' - 0"	0' - 1 3/4"	FV	Wood / Glass	Painted	1	Hollow Metal	Painted	Tempered		
16	3' - 0"	7' - 0"	0' - 1 3/4"	F	Wood	Painted	1	Hollow Metal	Painted	N/A		
17	10' - 0"	12' - 0"	0' - 2 1/8"	OH	Aluminum / Glass	Factory Finish	N/A	N/A	Factory Finish	Tempered		
18	10' - 0"	12' - 0"	0' - 2 1/8"	OH	Aluminum / Glass	Factory Finish	N/A	N/A	Factory Finish	Tempered		
19	10' - 0"	12' - 0"	0' - 2 1/8"	OH	Aluminum / Glass	Factory Finish	N/A	N/A	Factory Finish	Tempered		
20	3' - 0"	7' - 0"	0' - 1 3/4"	F	Hollow Metal	Painted	2	Hollow Metal	Painted	N/A		
21	3' - 0"	7' - 0"	0' - 1 3/4"	F	Hollow Metal	Painted	2	Hollow Metal	Painted	N/A		
22	3' - 0"	7' - 0"	0' - 1 3/4"	F	Hollow Metal	Painted	2	Hollow Metal	Painted	N/A	45 Min.	Provide Fire Rated label on Door and Frame
23	3' - 0"	7' - 0"	0' - 1 3/4"	F	Hollow Metal	Painted	2	Hollow Metal	Painted	N/A	45 Min.	Provide Fire Rated label on Door and Frame
24	3' - 0"	7' - 0"	0' - 1 3/4"	F	Hollow Metal	Painted	2	Hollow Metal	Painted	N/A		
25	10' - 0"	12' - 0"	0' - 2 1/8"	OH	Aluminum / Glass	Factory Finish	N/A	N/A	Factory Finish	Tempered		
26	10' - 0"	12' - 0"	0' - 2 1/8"	OH	Aluminum / Glass	Factory Finish	N/A	N/A	Factory Finish	Tempered		
27	10' - 0"	12' - 0"	0' - 2 1/8"	OH	Aluminum / Glass	Factory Finish	N/A	N/A	Factory Finish	Tempered		

WINDOW LEGEND

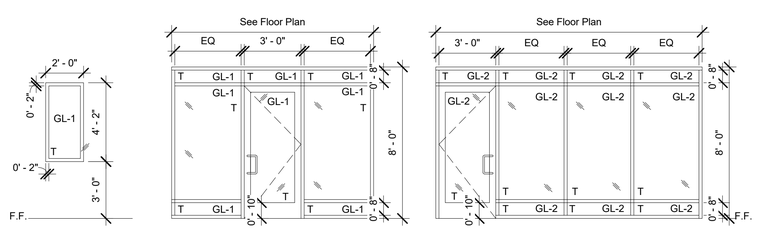

1 DT_Sheet A620_Window Legend_Single Front Enter
1/4" = 1'-0"

DOOR AND FRAME LEGEND

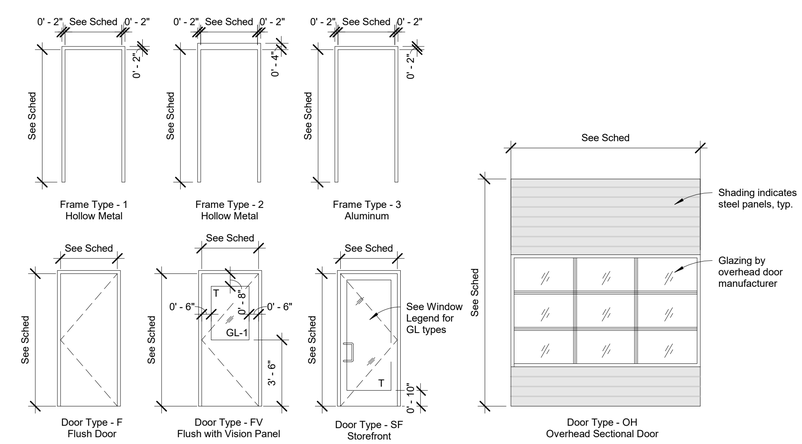

NOTE: Refer to floor plan for direction of door swing.

2 DT_Sheet A620_Door & Frame Legend
1/4" = 1'-0"

AHO ARCHITECTS
a sole proprietorship
www.ahoarch.com

TIMOTHY ARNOLD AHO
REGISTERED
NO. 9084
COMMONWEALTH OF KENTUCKY
ARCHITECT
10/04/2024

Express Oil Change & Tire Engineers
Single Building / Right Hand Oil Change / Front Enter / Side Tire Storage
Morehead, Kentucky

FINAL

No.	Description	Date

© 2024 Aho Architects, a sole proprietorship All Rights Reserved.

Schedules

Project number	24029
Date	10/04/2024
Drawn by	ARC
Checked by	N/A

A620

Scale 1/4" = 1'-0"

10/8/2024 3:56:40 PM

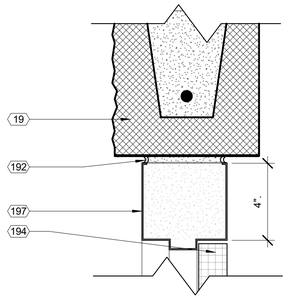

1 DT_Sheet A621_Door Head Detail_Masonry
3" = 1'-0"

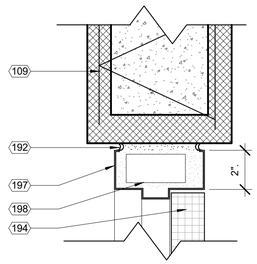

2 DT_Sheet A621_Door Jamb Detail_Masonry
3" = 1'-0"

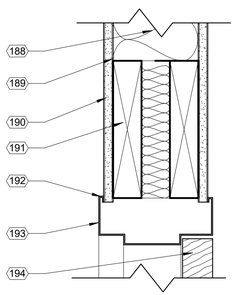

3 DT_Sheet A621_Door Head Detail_Wood
3" = 1'-0"

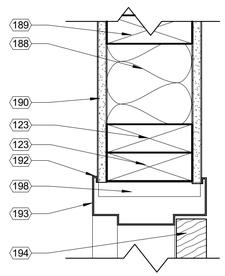

4 DT_Sheet A621_Door Jamb Detail_Wood
3" = 1'-0"

Keynote Schedule

Tag	Text
19	Painted split-face CMU (bond beam where indicated; see Structural). See Specification 042200 Concrete Unit Masonry. Color as indicated on Finish Schedule.
109	Horizontal joint reinforcement at 16" o.c. vertical.
123	Blocking. See Structural.
188	Kraft-faced batt insulation. Kraft in contact with gypsum board.
189	2x wood studs at 16" o.c.
190	1/2" painted gypsum board.
191	Double 2"x8" wood header.
192	Caulk all around on both sides.
193	Painted hollow metal frame with returns. See Finish Schedule for color.
194	Scheduled door. See plans for details.
197	Painted hollow metal frame, grouted solid.
198	Jamb anchors. Provide 3 per jamb.

Material Schedule

Abbreviation	Material Description	Manufacturer	Style Name or Number	Color (Description)	Size	Finish	Material Notes
ACT-1	Acoustical Ceiling Tile	Armstrong	1775 Dune	White	24"x24"	N/A	Suprafine XL 9/16" Exposed Tee Grid
P-1	Paint - Color 1	Sherwin Williams	See Paint Schedule on G202	SW6966 Blueblood	N/A	See Paint Schedule on G202	
P-2	Paint - Color 2	Sherwin Williams	See Paint Schedule on G202	Custom Color (Dover Gray)	N/A	See Paint Schedule on G202	
P-3	Paint - Color 3	Sherwin Williams	See Paint Schedule on G202	SW7669 Summit Gray	N/A	See Paint Schedule on G202	
P-4	Paint - Color 4	Sherwin Williams	See Paint Schedule on G202	SW6959 Bluechip	N/A	See Paint Schedule on G202	
P-5	Paint - Color 5	Sherwin Williams	See Paint Schedule on G202	Safety Yellow	N/A	See Paint Schedule on G202	
P-6	Paint - Color 6	Sherwin Williams	See Paint Schedule on G202	Safety Red	N/A	See Paint Schedule on G202	
P-7	Paint - Color 7	Sherwin Williams	See Paint Schedule on G202	SW7006 Extra White	N/A	See Paint Schedule on G202	
PL-1	Plastic Laminate - Color 1	Wilsonart	4880-38	Carbon Mesh	N/A	N/A	
RB	Rubber Base	Ropee	Pinnacle	175 Slate	4"	N/A	
SC	Sealed Concrete	Sherwin Williams	See Paint Schedule on G202	Haze Gray	N/A	See Paint Schedule on G202	Add SharkGrip for added slip resistance
SH	StonHard Flooring	StonHard	N/A	N/A	N/A	N/A	Provided and installed by (Others)
FRP-1	Fiberglass Reinforved Panels	Marlite	4'X8' Textured Panels	P430N Medium Gray	4'X8'	Pebbled	

Finish Schedule for Additional Items

1.	Doors & Frames: Paint P-3	9.	Keynote 16: P-3	17.	Door Hardware: Satin Chrome	25.	Dumpster Gate / Frame: P-3
2.	Bollards & Dumpster Posts: P-6	10.	Keynote 17: P-6	18.	Window Gaskets: Light Gray	26.	Overhead Door: White
3.	Exterior Pole Sign: By others.	11.	Keynote 18: P-2	19.	Exterior Aluminum Storefront & Door: Clear Anodized	27.	Lintel at OH Doors: P-3
4.	Conductor Head / Downspouts: Match P-2	12.	Keynote 19: P-3	20.	Abrasive Nosing: Safety Yellow	28.	Countertop Carbon Mesh: PL1
5.	Electrical covers to be brushed aluminum	13.	Knox Box: Aluminum	21.	Interior Aluminum Storefront & Door: Clear Anodized	29.	Keynote 24: P-1
6.	Paint all louvers to match adjacent finish	14.	Roof: White TPO	22.	Chair Rail: Stainless Steel by others		
7.	Keynote 14: P-1	15.	Coping Cap @ Dumpster: Match P-6	23.	Word Wall: P-3		
8.	Stairs & Railings & Interior Ladder (if req'd): P-5	16.	Coping Cap @ Bldg: Match P-1	24.	Canopy: Match P-1		

Finish Schedule

Number	Name	Area	Floor Finish	Base Finish	Walls: Rear (South)	Walls: Right (West)	Walls: Front (North)	Walls: Left (East)	Ceiling Finish	Remarks
1	Service Writing	140 SF	SC	RB	Storefront	P-1, P-2, P-3	Storefront & P-1, P-2, P-3	P-1, P-2, P-3	ACT-1	See G301 for paint patterns
2	Waiting Room	126 SF	SC	RB	P-3 & Vinyl Graphics (By Others)	P-1, P-2, P-3	Storefront	P-1, P-2, P-3	ACT-1	See G301 for paint patterns. Word Wall with Vinyl Graphics (By Others) to be painted P-3
3	Toilet	43 SF	SC	RB	FRP-1	FRP-1	FRP-1	FRP-1	ACT-1	
4	Manager	51 SF	SC	RB	P-3	P-3	P-3	P-3	ACT-1	
5	Oil Change	1271 SF	SH	None / RB	P-3	P-1, P-4	P-3	P-1, P-4 & Vinyl Graphics (By Others)	No Ceiling	Rubber base on gypsum board walls only. See G301 for paint patterns.
6	Corridor	115 SF	SC	RB	P-1	P-1	FRP-1	P-1	P-7	
7	Break Room	61 SF	SC	RB	P-3	P-3	P-3	P-3	ACT-1	
8	Toilet	45 SF	SC	RB	FRP-1	FRP-1	FRP-1	FRP-1	ACT-1	
9	Service	2483 SF	SC	None / RB	P-3	P-1, P-4 & Vinyl Graphics (By Others)	P-3	P-1, P-4	No Ceiling	Rubber base on gypsum board walls only. See G301 for paint patterns.
10	Storage	188 SF	SC	None / RB	P-3	P-1, P-4	P-1, P-4	None	No Ceiling	
11	Pit	1247 SF	SC	None	None	None	None	None	N/A	Paint all structural steel in Pit P-5 Safety Yellow.
12	Storage	258 SF	SC	None	P-3	P-3	Fence	P-3	No Ceiling	
13	Storage	500 SF	SC	None	Fence	P-3	P-3	P-3	No Ceiling	

AHO ARCHITECTS
a sole proprietorship
www.ahoarch.com

TIMOTHY ARNOLD AHO
REGISTERED
NO. 9084
COMMONWEALTH OF KENTUCKY
ARCHITECT
10/04/2024

Express Oil Change & Tire Engineers
Single Building / Right Hand Oil Change / Front Enter / Side Tire Storage
Morehead, Kentucky

FINAL

No.	Description	Date

© 2024 Aho Architects, a sole proprietorship
All Rights Reserved.

Finish Schedules & Head, Jamb, and Sill Details

Project number	24029
Date	10/04/2024
Drawn by	ARC
Checked by	N/A

A621

Scale As indicated

10/8/2024 3:56:41 PM

1 02_3D View_Front (North)

*See Civil for actual site conditions, including dumpster enclosure location.

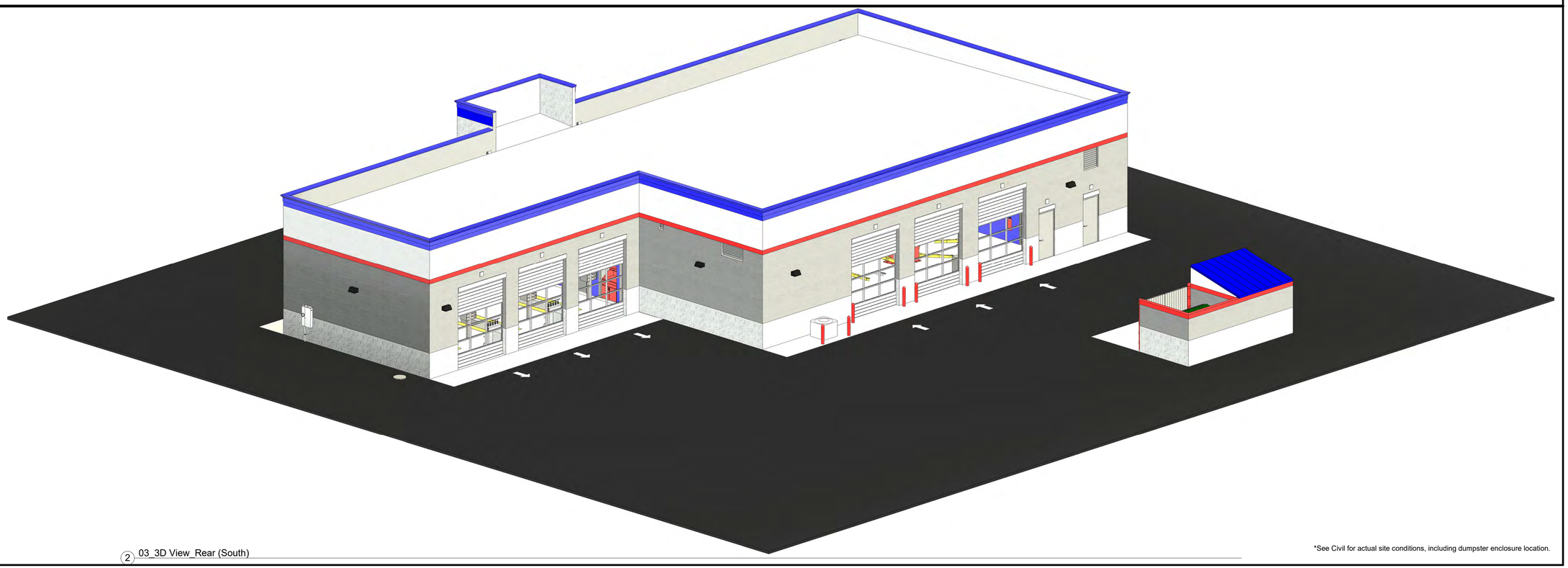

2 03_3D View_Rear (South)

*See Civil for actual site conditions, including dumpster enclosure location.

AHO ARCHITECTS
a sole proprietorship
www.ahoarch.com

TIMOTHY ARNOLD AHO
REGISTERED
NO. 9084
COMMONWEALTH OF KENTUCKY
ARCHITECT
10/04/2024

Express Oil Change & Tire Engineers

Single Building / Right Hand Oil Change / Front Enter / Side Tire Storage

Morehead, Kentucky

FINAL

No.	Description	Date

© 2024
Aho Architects, a sole proprietorship
All Rights Reserved.

3D Views

Project number	24029
Date	10/04/2024
Drawn by	ARC
Checked by	N/A

R100

Scale

10/8/2024 3:56:53 PM

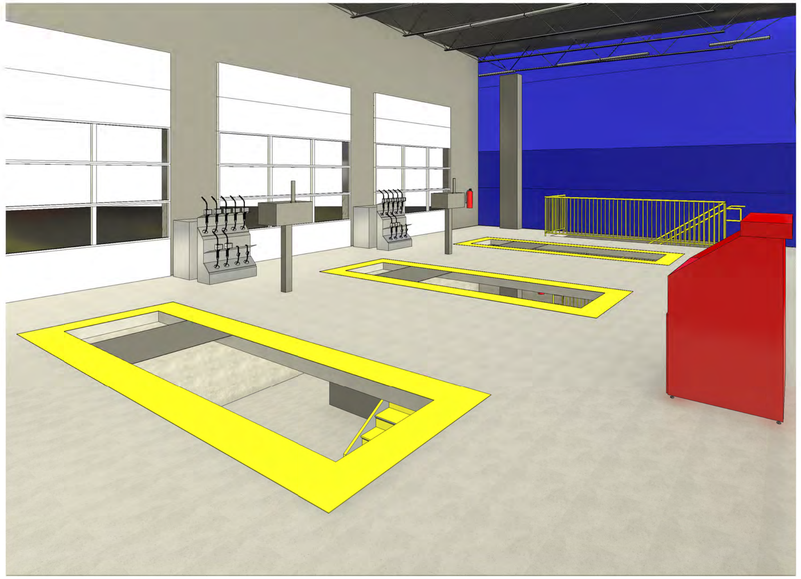

1 04_3D View_Oil Change A

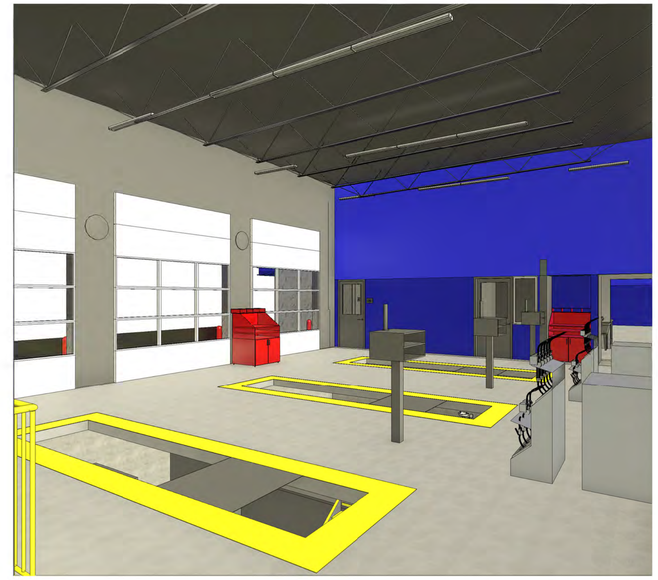

2 05_3D View_Oil Change B

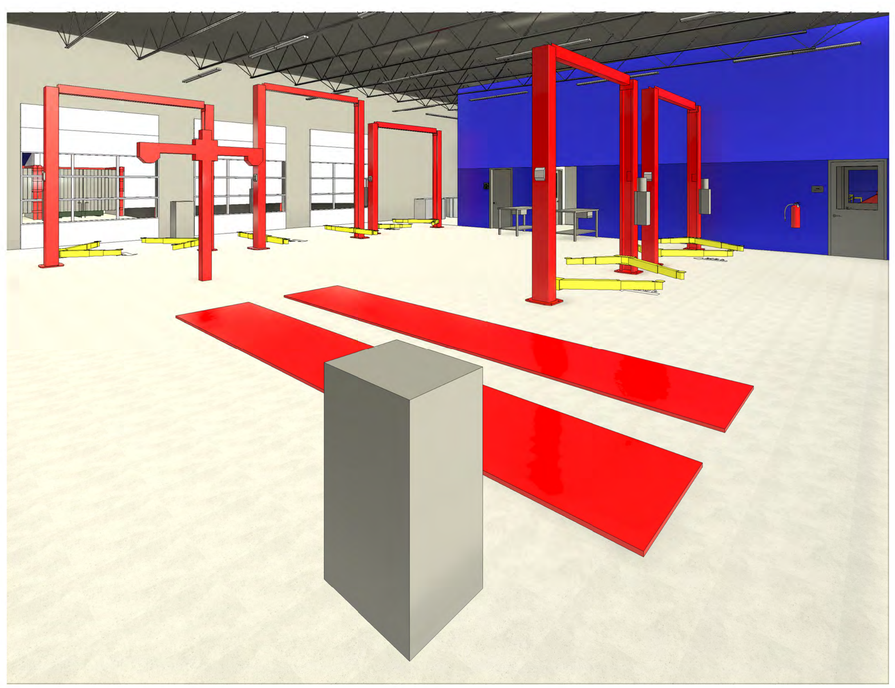

3 06_3D View_Service Bay A

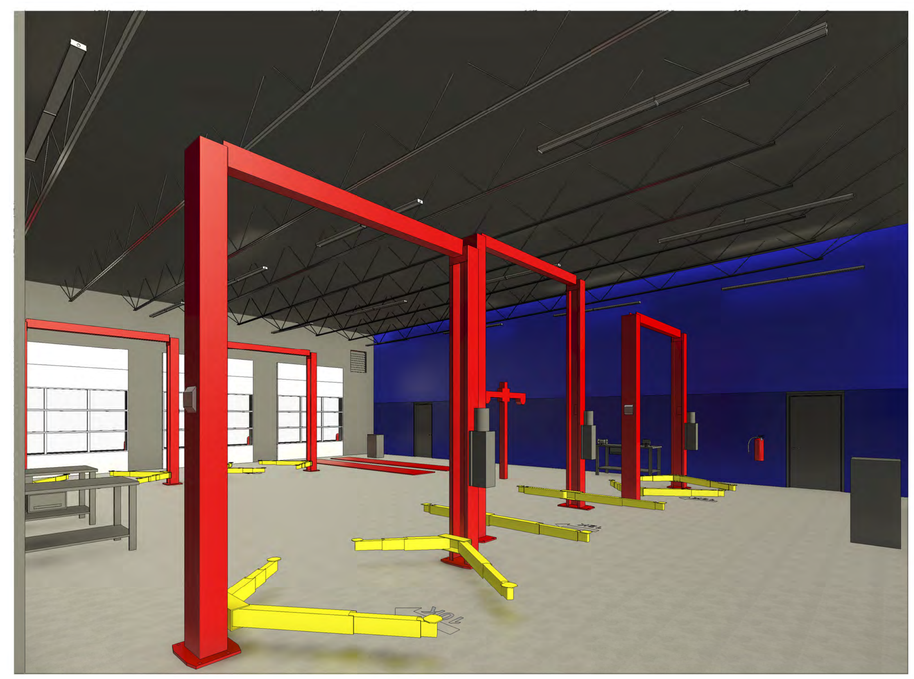

4 07_3D View_Service Bay B

AHO ARCHITECTS
a sole proprietorship
www.ahoarch.com

TIMOTHY ARNOLD AHO
REGISTERED
NO. 9084
COMMONWEALTH OF KENTUCKY
ARCHITECT
10/04/2024

Express Oil Change & Tire Engineers

Single Building / Right Hand Oil Change / Front Enter / Side Tire Storage

Morehead, Kentucky

FINAL

No.	Description	Date

2024
© Aho Architects, a sole proprietorship
All Rights Reserved.

3D Views

Project number	24029
Date	10/04/2024
Drawn by	ARC
Checked by	N/A

R101

Scale

10/8/2024 3:57:13 PM

SCHEDULE OF SPECIAL INSPECTIONS

Inspection/Test/Certification	C or P	Extent/Comments
General Conditions		
Review of Structural Documents and Shop Drawings to determine differences not approved by Architect or Engineer of Record	Continuous	Structural Documents should take precedence over any shop drawings. Special Inspector should use the Architectural and Structural Documents as the primary documents for review of construction. Shop drawing should be used as secondary document to review details not shown on the Architectural and Structural Documents. Any discrepancy between the two documents should be resolved by the Architect or Engineer of Record before proceeding with construction.
The Special Inspector duties for missing details, conflicting details or coordination issues.	Continuous	Reasonable attempts have been made on the part of the design team to properly coordinate drawings. However in the event that a question arises on the project the Special Inspector shall obtain clarification from the Architect on all items. No changes shall be made to the drawings or construction without written conformation.
Fabricators		
Review the quality control procedures of the following fabricators for completeness and adequacy relative to the fabricator's scope of work: steel fabricator, lightgage truss fabricator, wood truss fabricator.	Periodic	
The following fabricators, if registered and approved by the building official, may submit "Certificates of Compliance" at the completion of their scope of work that their fabricated items were constructed in accordance with the approved construction documents: steel fabricator, lightgage truss fabricator, wood truss fabricator. Fabricators having successfully completed no fewer than 5 similar projects may also submit for approval with documentation of similar projects.	Periodic	
Soils and Deep Foundations		
Verify bearing capacities of soils beneath footings.	Periodic	As recommended in approved soils report and specified in earthwork specifications.
Verify assumed bearing capacities and determine settlements of soils beneath footings and building pad.	Periodic	As noted on the drawings, recommended by the geotechnical engineer, and specified in earthwork specifications.
Verify site preparation prior to beginning fill placement. Verify fill material type, placement method, lift thickness, and compaction of fill material. Verify in-place density of compacted fill.	Periodic	As recommended in approved soils report and specified in earthwork specifications.
Inspect installation of pile foundations including installation of test piles.	Continuous	As recommended in approved soils report and specified in pile specifications.
Inspect installation of drilled pier foundations and installation of test piers. Inspect reinforcing in each pier and test concrete.	Continuous	As recommended in approved soils report and specified in pile specifications.
Inspect helical pile installation.	Continuous	Record installation equipment used, pile dimensions, tip elevations, final depth, final installation torque.
Concrete Construction		
Inspect concrete formwork except as noted above for proper dimensions. Verify that construction joints are properly keyed. Verify that slab recesses, if any, have been installed.	Periodic	Prior to each pour.
Inspect reinforcing steel except as noted above for installation including size, spacing and bar clearances. Verify that lap splices and embedment lengths are per the construction documents. Verify that dowels for work above are properly aligned and spaced to match other work.	Periodic	Prior to each pour.
Inspect bolts	Periodic	
Verify each proposed concrete mix for the project.	Periodic	For each proposed mix
Sample all concrete for strength tests and test concrete for slump, air content, temperature, and other tests.	Continuous	During placement operations. Reference concrete specifications for specific tests and frequencies.
Inspect concrete placement except as noted above.	Continuous	
Inspect all concrete curing operations as noted in the extents column.	Periodic	Monitor during hot, cold and windy conditions. Reference concrete specifications.
Verify sawed joints in slabs on grade are comleted within 4 hours of the final set of the concrete	Continuous	
Masonry Construction		
Inspect proportions of site prepared mortar and grout. Inspect construction of mortar joints. Inspect reinforcement for correct size and spacing. Inspect work for correct location and type of embeds and anchor bolts. Inspect work for size and location of structural elements.	Periodic	At beginning of masonry construction and every _____ square feet of masonry thereafter.
Inspect masonry cells and cleanouts prior to placement of grout. Inspect grout proportions. Inspect placement of reinforcement.	Periodic	Prior to grouting of masonry.
Inspect grouting operations to ensure compliance with code and construction documents.	Continuous	During grouting.
Inspect protection of masonry during cold weather and hot weather.	Periodic	During periods with temperatures below 40 degrees or above 90 degrees.
Inspect preparation of grout specimens, mortar specimens and / or prisms.	Continuous	During preparation of all specimens.
Verify compliance with all required inspection provisions of the construction documents and approved submittals.	Periodic	As required for duration of project.
Steel Construction		
Inspection of the steel pieces		
Inspection of frame		
Inspect high-strength bolts, nuts and washers: a. Identify markings to conform to ASTM standards specified in the construction documents. b. Inspect manufacturer's certificate of compliance.	Periodic	Reference project specifications and ASTM material specifications; AISC 335, (Sect A3.4); AISC LRFD (Sect A3.3).
Inspect high-strength bolting: Bearing-type connections.	Periodic	
Inspect and verify structural steel material: a. Identification markings to conform to ASTM standards specified in the approved construction documents. b. Manufacturers' certified mill test reports.	Periodic	Confirm that materials meet applicable ASTM specifications noted in construction documents.
Inspect and verify weld filler materials: a. Identification markings to conform to AWS specification in the approved construction documents. b. Manufacturer's certificate of compliance required.	Periodic	Confirm that materials meet applicable ASTM specifications noted in construction documents.
"Inspect welding: Structural Steel: 1) Complete and partial penetration groove 2) Multipass fillet welds. 3) Single-pass fillet welds > 5/16 "	Continuous	Per specifications and AWS D1.1
"Inspect welding: Structural Steel: 1) Single-pass fillet welds ≤ 5/16 2) Floor and deck welds. "	Periodic	Per specifications and AWS D1.1
"6. Inspect steel frame joint details for compliance with approved construction documents: a. Details such as bracing and stiffening. b. Member locations. c. Application of joint details at each connection."	Periodic	Inspect complete frame.
Verify deck support angles are provided for all opening greater than 100 square inches.	Periodic	
Metal Deck		
Verify depth and gauge of all deck elements	Periodic	
Verify adequate bearing of ends of decking	Periodic	
Steel Joist		
1. Installation of open-web steel joists		
a. End connections - welded or bolted	Periodic	
b. Bridging - horizontal or diagonal.		
1. Standard bridging	Periodic	
2. Bridging that differs from the SJI specifications listed in Section 2207.1	Periodic	
Special Inspections for Wind Resistance		
Roof Cladding and Roof Framing Connections	Periodic	
Wall Connections to Roof and Floor Diaphragms and Framing	Periodic	
Roof and Floor Diaphragm Systems, including Collectors, Drag Struts, and Boundary Elements.	Periodic	
Vertical Windforce-Resisting Systems, including Braced Frames, Moment Frames, and Shearwalls	Periodic	
Windforce-Resisting System Connections to the Foundation.	Periodic	
Fabrication and installation of components and assemblies required to meet the impact-resistance requirements of Section 1609.1.4.	Periodic	

JOHN JONES, PE, SE
STRUCTURAL ENGINEER
125 18TH STREET NORTH
PELL CITY, ALABAMA
205-884-5334

GENERAL NOTES

1. Contractor shall compare structural drawings and architectural drawings. Any omissions or discrepancies between plans, details, and specifications shall be brought to the attention of the Architect or Engineer before bidding. In all cases, more stringent requirement governs. Architectural dimensions and elevations will control.
2. Structural drawings or parts of the structural drawings may not be used as shop drawings without prior written approval.
3. All or parts of these drawings were produced with computer aided drafting. Drawings are available from the Engineer in DWG format on request.
4. Contractor proposed changes to details must be clearly noted on the first sheet of all shop drawings.
5. Construction shown is stable after the building is complete including interior and exterior finishes. The Contractor is responsible for temporary bracing of the structure during construction.
6. Review of submittal information shall be for general compliance with the contract documents and shall not include checking of detailed dimensions or detailed quantities.

DESIGN LOADS

1. Reference code for loading 2018 Kentucky Building Code.
   a. Building Classification II
   b. Wind Load
      1) Basic Wind Speed (3 sec gust) 105 mph
      2) Wind Exposure C
      3) Internal Pressure Coefficient +/- 0.18
      4) Velocity Pressure (qz) 24.0 psf
   c. Roof Snow Load
      1) Ground Snow Load (Pg) 15 psf
      2) Flat Roof Snow Load (Pf) 15 psf
      3) Snow Exposure (Ce) 1.0
      4) Importance Factor 1.0
      5) Thermal Factor (Ct) 1.0
   d. Seismic Load
      1) Importance Factor 1.0
      2) Mapped Spectral Response Accelerations
         a) Ss 0.193
         b) S1 0.083
      3) Site Class D
      4) Spectral Response Coefficients
         a) Sds 0.205
         b) Sd1 0.133
      5) Seismic Design Category B
      6) Base Seismic-Force-Resisting System(s) and Response Modification Factor
         a) Intermediate Reinforced Masonry Shear Walls 3.5
      7) Design Base Shear 11 kips
      8) Seismic Response Coefficient (Cs) 0.059
      9) Analysis Procedure = Equivalent Lateral Force
   e. Live Load
      1) Roof Load 20 psf
      2) Service Bay and slabs on grade 100 psf
      3) Mezzanine 50 psf

FOUNDATIONS

1. Foundation design for this project was based on soils information provided by Terracon
2. Bearing capacity---------- 3000 psf
3. All footings are to bear on engineered fill.
4. Install corner bars at all footing intersections and corners (Provide lap length e.w.)
5. All footing elevations are given to the top of the footings.
6. Footing steps shown on the plans are furnished as a guide for estimating quantities. Final elevations are to be set in the field. Bearing elevations must be approved by a Soils Engineer before any concrete is placed.
7. Coordinate foundation elevations with plumbing requirements. Step footings as required to clear plumbing lines.
8. Provide drainage for all retaining walls, see architectural for notes and details.

MASONRY

1. All masonry work to be in accordance with "Building Code Requirements for Concrete Masonry Structures" TMS 402-2016 and "Specifications for Masonry Structures" TMS 602-2016
2. Fill all concrete masonry units with concrete or grout from the top of the footing to the finish floor or to 8" above finish grade whichever is higher.
3. Use ladder type joint reinforcement (Dur-O-Wall SW DA3100 or better) at 16" on center in all cavity walls where brick is used for one or more of the wythes.
4. Use truss type joint reinforcement (Dur-O-Wall SW DA3100 or better) at 16" o/c. in all other masonry walls.
5. Provide joint reinforcement at 8" o/c. for all walls constructed with stack bond.
6. Use Type "M" or Type "S" mortar in accordance with IBC Table 2103.7(1).
7. Minimum compressive strength of concrete masonry f'm = 2500 psi. Submit for review test data on strength of units before starting any masonry work.
8. Minimum compressive strength of grout f'm = 2500 psi. Use 3/8" max size aggregate. See Special Inspection Schedule for any testing requirements. Grout slump shall be 8" to 11".
9. Use "Fine" grout for all reinforced piers and reinforced wall in accordance with ASTM C 476.
10. Each grout lift shall not exceed 5'-0" unless cleanouts are provided in the bottom course.
11. Fill cells under all lintels with grout.
12. Provide lintels over all openings through wall. See lintel details for reinforcement.
13. Unless otherwise noted provide control joints in all walls 4'-0" from wall intersections or corners and at 20'-0"
14. Extend all horizontal steel and bond beams thru control joints.
15. Vertical Reinforcement shall extend into the bond beam.
16. Unless noted, all bars are to be located at the center of cell. Where bars are specified at each face, provide minimum ¾" clear space between reinforcement and CMU face shell.
17. Anchor bolt into grouted cell locations only, unless noted otherwise.

REINFORCING STEEL AND CONCRETE

1. All concrete work is to be in accordance with the "Building Code Requirements for Reinforced Concrete" (ACI 318-14).
2. All detailing is to be in accordance with "ACI Detailing Manual" SP-66
3. Use of Calcium Chloride, Chloride Ions, or other salts in concrete are prohibited.
4. Concrete Properties: See Schedule
   a. All concrete must obtain 7 day strength of 70% of design strength.
   b. Concrete mixes may use up to 25% of cementious weight as fly ash.
   c. Concrete mixes may use water reducers, accelerators or retarders with prior approval.
   d. Do not provide air entrainment in concrete mixes for interior slabs.
5. All steel reinforcement shall be of deformed bars of billet steel conforming to ASTM A615, Grade 60 in all concrete.
6. Welded wire fabric shall be ASTM 185 and shall lap 2 cross wires or 6" whichever is greater on all sides. All laps shall be wired together.
7. Provide (2) #4 bars x 4'-0" at re-entrant corner locations Typical. Locate 3" away from corner and space 1'-0" apart.
8. All slabs on grade are 6", unless noted. Slabs are to be placed on 10 Mil, PVC vapor barrier over 4" of porous fill. Reinforce slabs with 6x6 W2.9 x W2.9 WWF placed 1" from top of slab. Unless otherwise noted slabs shall have joints placed a 12'-0" on centers. Joints may be control joints or construction joints. See Architectural Plans for floor slopes and recesses for hard tile.
9. Minimum concrete cover for reinforcement:
   a) Footings 3" bottom, 2" sides
   b) Cast-In-Place Walls
      Surfaces exposed to weather or soil 2" - #6 and greater, 1-1/2" - #5 and smaller
      Other surfaces 3/4"
10. Provide corner bars at all wall and footing intersections.
11. No openings shall be allowed to penetrate any concrete work, unless it is shown on the structural framing plans without prior written approval. Contractor shall submit for review locations of proposed openings not shown 30 days prior to pouring any concrete.
12. Provide a continuous water bar at all wall construction joints below ground level.
13. Use 3/4" chamfer for all exposed corners unless noted.
14. Testing samples for preparing strength test specimens of each concrete mixture placed each day shall be taken in accordance with (1) through (3).
    1. At least once a day
    2. At least once for each 150yd^3 of concrete
    3. At least once for each 5000ft^2 of surface area for walls or slabs.

STRUCTURAL STEEL

1. All detailing, fabricating, and erection of structural steel shall be in accordance with the AISC 360-16 "Specifications for Structural Steel Buildings". All reactions shown are ASD loads.
2. All connections are to be detailed as Type 2 "simple frame connections".
3. All structural steel W shapes shall be ASTM A992.
4. All structural steel Tube sections shall be ASTM A500 Grade B.
5. All structural steel Pipe sections shall be ASTM A501.
6. All structural steel channels, angles and other sections shall be ASTM A36, unless noted.
7. Headed Studs shall be Type B Shear Connectors.
8. Shop and field connections shall be welded with E-70XX electrodes or bolted with 3/4" dia. A-325N or A-325F bolts, unless noted.
9. Use 3/4" cap and bearing plates, unless noted.
10. Use 3/4" dia x 1'-0" long ASTM 1554 Grade 36 anchor bolts, unless noted. In lieu of cast bolts, 3/4"x1'-0" long HAS rods epoxied with Hilti HVA epoxy, or equal, may be used with prior approval.
11. Grout under baseplates with ASTM C 1107 cementitious 6000 psi Non-Shrink Grout.
12. Structural steel shall be shop primed per SSPC paint system No. 7. Primer shall be SSPC paint with a minimum thickness of 2.0 MILS. Omit Paint at surfaces to be fireproofed.
13. Provide L 3"x3"x1/4" frames around all roof opening through metal decking.

STEEL JOIST

-

1. All steel joists shall conform to the standard specifications for the joist noted, as adopted by the Steel Joist Institute.
2. Refer to Components & Cladding Table and Diagram for roof uplift zones and pressures. Use 8psf dead load for net uplift determination.
3. K Series joists shall be welded to bearing plates or steel members with two 1/8" fillet welds 2" long.
4. All joist bearing plates are to be set 1/4" above the top of concrete masonry units.
5. Weights of mechanical units are not included in the joist loading designation shown. Design joist for loading shown plus the weight of mechanical shown. General contractor is to verify all weights of mechanical units with Mechanical Subcontractor before submitting shop drawings.

AHO ARCHITECTS
a sole proprietorship
www.ahoarch.com

STATE OF KENTUCKY
JOHN C. JONES
28096
LICENSED PROFESSIONAL ENGINEER

10/04/2024

Express Oil Change & Tire Engineers

Single Building / Right Hand Oil Change / Front Enter / Side Tire Storage

Morehead, Kentucky

FINAL

No.	Description	Date

2024
© Aho Architects, a sole proprietorship
All Rights Reserved.

General Notes

Project number	24029
Date	10/04/2024
Drawn by	jcj
Checked by	jd

S0.1

Scale 3/4" = 1'-0"

JOHN JONES, PE, SE
STRUCTURAL ENGINEER
125 18TH STREET NORTH
PELL CITY, ALABAMA
205-884-5334

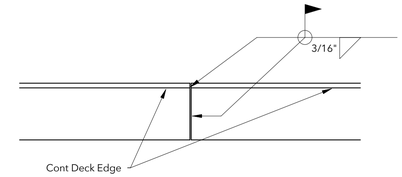

Typical Roof Deck Edge Angle Splice Detail

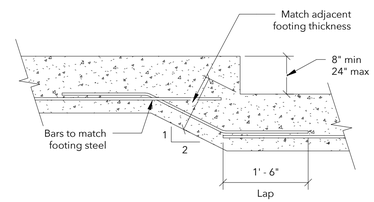

Single Footing Step

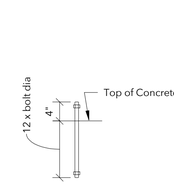

Typical Anchor Bolt Detail

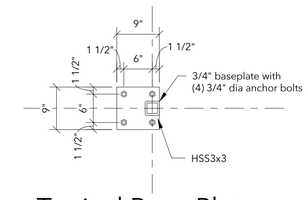

Typical Base Plate

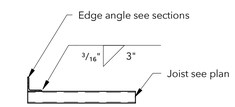

Deck Edge
Fastening Detail

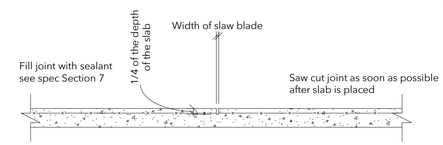

Note: Saw cut joint must be made the same day the slab is placed

Typical Control Joint

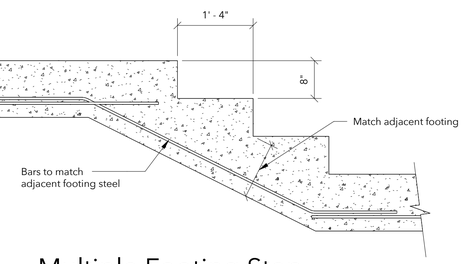

Multiple Footing Step

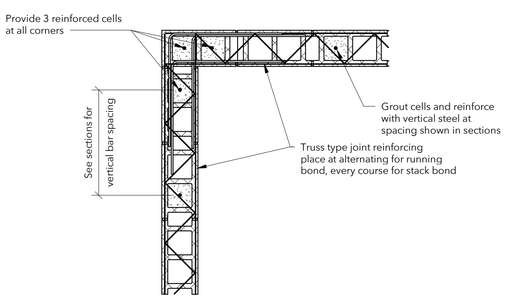

Typical Joint
Reinforcing at Corner

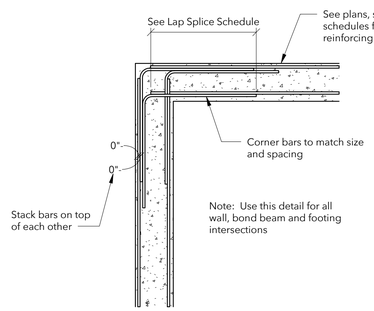

Typical Beam, Wall or Footing
Reinforcing at Corners

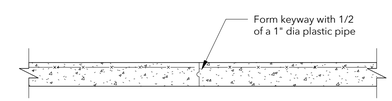

Typical Construction Joint

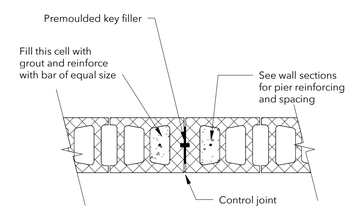

Note:
1. See architectural plan for spacing. If spacing is not shown place joints at 3 times the wall height but not greater than 20'-0" o.c., and at 4'-0" from corners
2. Extend all horizontal reinforcing including bond beam steel thru control joints.

Typical MasonryWall
Control Joint

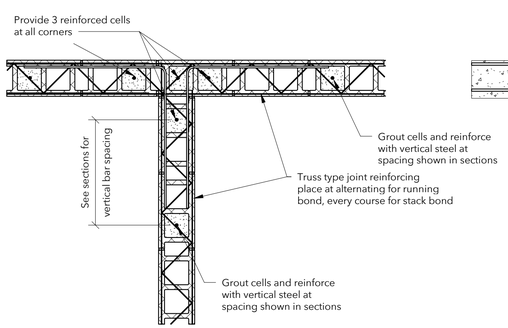

Typical Joint Reinforcing
at Intersection

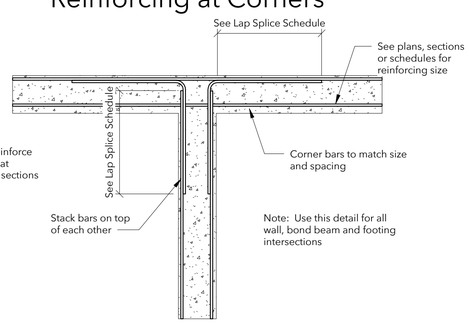

Typical Beam, Wall or Footing
Reinforcing at Intersetions

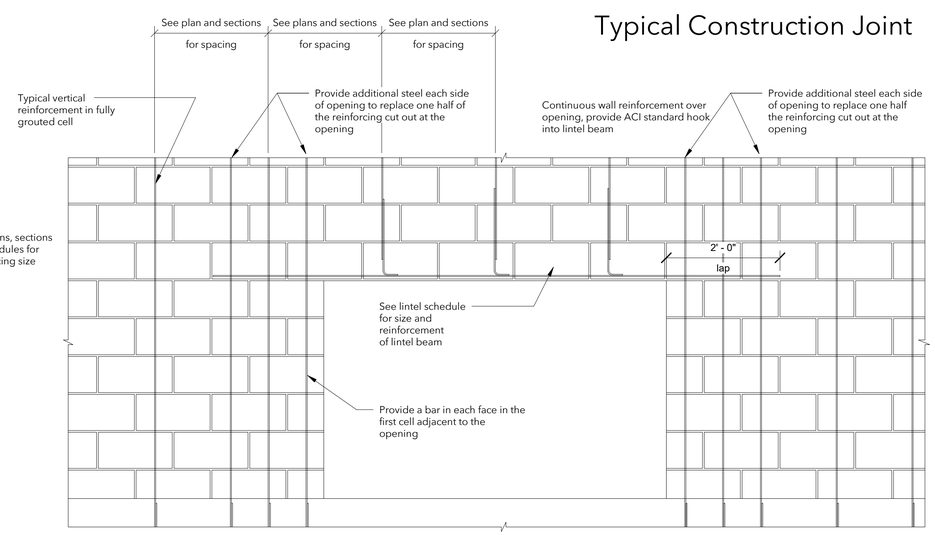

CMU Lintel Elevation

AHO ARCHITECTS
a sole proprietorship
www.ahoarch.com

STATE OF KENTUCKY
JOHN C. JONES
28096
LICENSED
PROFESSIONAL ENGINEER

10/04/2024

Express Oil Change & Tire Engineers

Single Building / Right Hand Oil Change / Front Enter / Side Tire Storage

Morehead, Kentucky

FINAL

No.	Description	Date

2024
© Aho Architects, a sole proprietorship
All Rights Reserved.

Typical Details

Project number	24029
Date	10/04/2024
Drawn by	jcj
Checked by	jd

S0.2

Scale 3/4" = 1'-0"

JOHN JONES, PE, SE
STRUCTURAL ENGINEER
125 18TH STREET NORTH
PELL CITY, ALABAMA
205-884-5334

AHO ARCHITECTS
a sole proprietorship
www.ahoarch.com

10/04/2024

CONCRETE SCHEDULE

Concrete Use	Design Strength	Max W/C Ratio	Slump Limits	Entrained Air Range	Weight	Notes
Basement Walls	4000 psi	n/a	6" to 8"	3% to 5%	150 pcf	Use HRWR
Slabs on Composite Metal Deck	4000 psi	n/a	6" to 8"	---	150 pcf	Use HRWR
Slabs on Grade/Grade Beams	4000 psi	n/a	6" to 8"	---	150 pcf	Use HRWR

Metal Deck Attachment Schedule

Area	Support Fastener/Pattern	Sidelap Fastener/Pattern
Roof - typical	#12 TEK screws 36/4 pattern	2 - #10 TEK screws
Roof - hatched area	#12 TEK screws 36/4 pattern	10 - #10 TEK screws

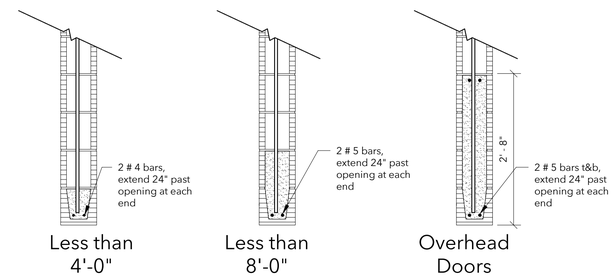

CMU Lintel Schedule

Reinforcing Steel Lap Splice Lengths

Bar Size	Column Splices	Bm, Ftg & Wall Splices	
		Top Bars	Other Bars
# 3	12"	19"	15"
# 4	15"	25"	19"
# 5	19"	31"	24"
# 6	23"	37"	29"
# 7	26"	54"	42"
# 8	30"	62"	48"
# 9	34"	70"	54"
# 10	38"	79"	61"
# 11	42"	87"	67"

Notes:
1. Top bars are any horizontal reinforcing steel that has another layer of steel more than 2" below the bars or reinforcing steel that has more than 12" of concrete below the bars.
2. All horizontal reinforcing bars in walls may be detailed as "Other Bars".
3. All corner bars may be detailed as "Other Bars".

Reinforcing Steel Lap Splice & Development Length for Concrete Masonry

Bar Size	Bar in center of wall			Bar in each face of wall
	6" CMU	8" CMU	12" CMU	
#3	16"	16"	16"	16"
#4	21"	21"	21"	30"
#5	32"	26"	26"	46"
#6	61"	43"	40"	85"
#7	NA	60"	46"	115"
#8	NA	NA	61"	NA

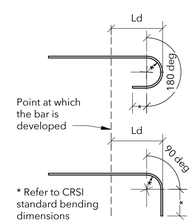

Notes:
1. Lengths are for vertical splces in walls.
2. Bar length for center of wall are based on f'm of 1500 psi or greater.
3. Bar length for face of wall are based on f'm of 2000 psi or greater.
4. Refer to General Notes and details for masonry strength.

Components and Cladding Schedule
a = 6.5'

Area (sf)	Zone 1,2,3 (+) psf	Zone 1 (-) psf	Zone 2 (-) psf	Zone 3 (-) psf	Zone 4 (+) psf	Zone 4 (-) psf	Zone 5 (+) psf	Zone 5 (-) psf
10	9.0	-24.3	-32.6	-39.2	23.6	-25.6	23.6	-31.5
50	9.0	-24.3	-32.6	-39.2	21.2	-23.1	21.2	-26.6
100	8.3	-23.6	-28.0	-28.0	20.1	-22.1	20.1	-24.5

Beam to Column
Single Shear Plate Connection Schedule

Min Beam Depth	Max end reaction	Length	# of bolts	Plate thickness	Fillet weld size
W10	16.7k	5-1/2"	2	5/16"	3/16"

- Use this table for Wide Flange Beams to HSS Columns
- Loads are ASD
- Bolts are 3/4"dia Group A ASTM F3125 Gr A325 in standard or short-slotted holes transverse to direction of load with threads Excluded from shear plane. More than 5 bolts must have short-slotted holes.
- Plate is A36 and welds are E-70XX electrodes
- Beam reactions that exceed the max reaction in this table will use the Double Angle Frame Connection Schedule below.

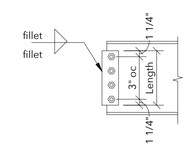

Beam Double Angle Shear Connection Schedule

Min Beam Depth	Max end reaction	Length	rows of bolts	Angle thickness	Weld A fillet size	Weld B fillet size
W10	14.6k	5-1/2"	2	1/4"	3/16"	1/4"

- Use this table for Wide Flange Beams to Wide Flange Columns or other Beams
- Loads are ASD
- Bolts are 3/4"dia Group A ASTM F3125 Gr A325 in standard or short-slotted holes transverse to direction of load with threads Excluded from shear plane.
- Angles are A36 and welds are E-70XX electrodes
- Beam reactions that exceed the max reaction in this table will shall be designed by steel fabricator and submit signed/sealed calculations prepared by a Professional Engineer licensed in the State of the Project

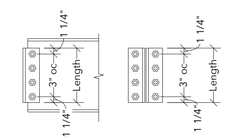

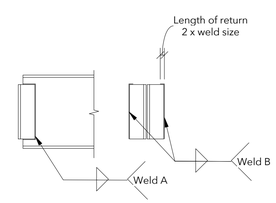

Express Oil Change & Tire Engineers

Single Building / Right Hand Oil Change / Front Enter / Side Tire Storage

Morehead, Kentucky

FINAL

No.	Description	Date

2024
© Aho Architects, a sole proprietorship
All Rights Reserved.

Schedules

Project number	24029
Date	10/04/2024
Drawn by	jcj
Checked by	jd

S0.3

Scale 3/4" = 1'-0"

JOHN JONES, PE, SE
STRUCTURAL ENGINEER
125 18TH STREET NORTH
PELL CITY, ALABAMA
205-884-5334

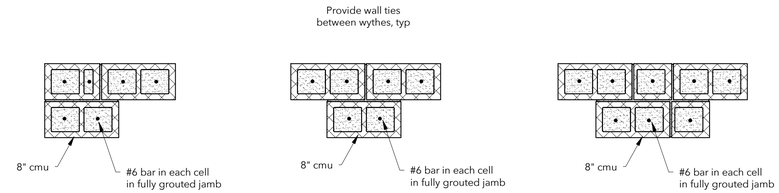

16" Jamb Reinforcing

32" Jamb Reinforcing

40" Jamb Reinforcing

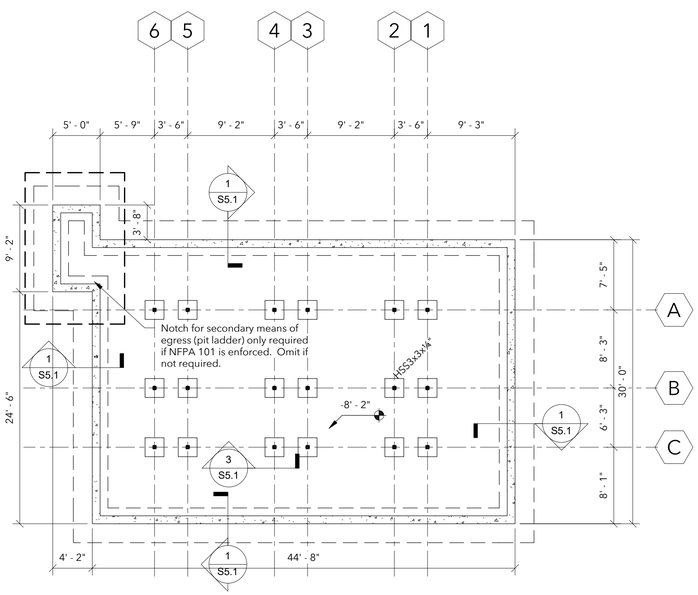

PIT FOUNDATION PLAN
1/8" = 1'-0"

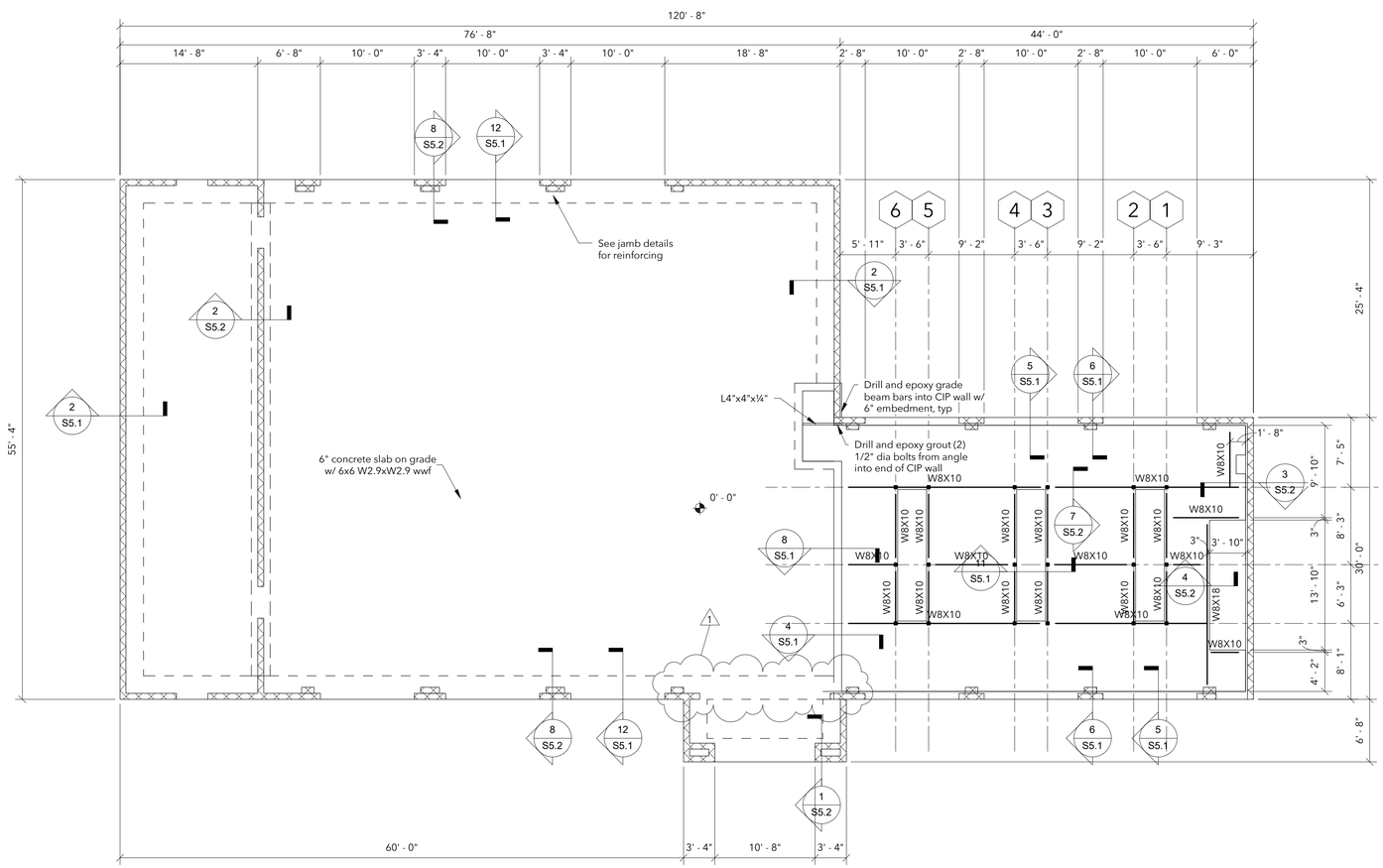

FOUNDATION PLAN
1/8" = 1'-0"

Sheet Notes:

1. See Sheet No S0 for typical details and general notes.
2. Reference all elevations to finish floor elevation (+) 0'-0"
3. Floor construction 3" concrete slab with 6x6 W2.9xW2.9 wwf over 2" x 20 ga. galvanized composite metal deck. Total slab thickness = 5". Provide 5/8" dia puddle welds on 36/4 pattern w/ (3) #12 TEK screw sidelap fasteners per span
4. All steel beam reactions shall be designed for 10 kips (ASD) unless noted otherwise.
5. Refer to architectural for all dimensions, slopes, elevations, etc. not illustrated on this plan. Coordinate all final dimensions and elevations with architectural.

AHO ARCHITECTS
a sole proprietorship
www.ahoarch.com

STATE OF KENTUCKY
JOHN C. JONES
28096
LICENSED
PROFESSIONAL ENGINEER

11.08.2024

Express Oil Change & Tire Engineers

Single Building / Right Hand Oil Change / Front Enter / Side Tire Storage

Morehead, Kentucky

FINAL

No.	Description	Date
1	ASI#1	11.08.24

2024
© Aho Architects, a sole proprietorship
All Rights Reserved.

Foundation Plan

Project number	24029
Date	10/04/2024
Drawn by	jcj
Checked by	jd

S1.1

Scale As indicated

JOHN JONES, PE, SE
STRUCTURAL ENGINEER
125 18TH STREET NORTH
PELL CITY, ALABAMA
205-884-5334

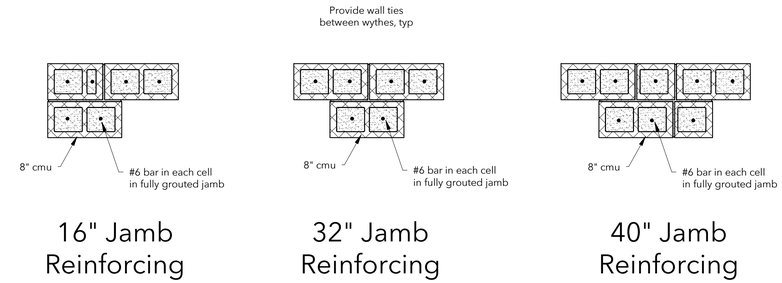

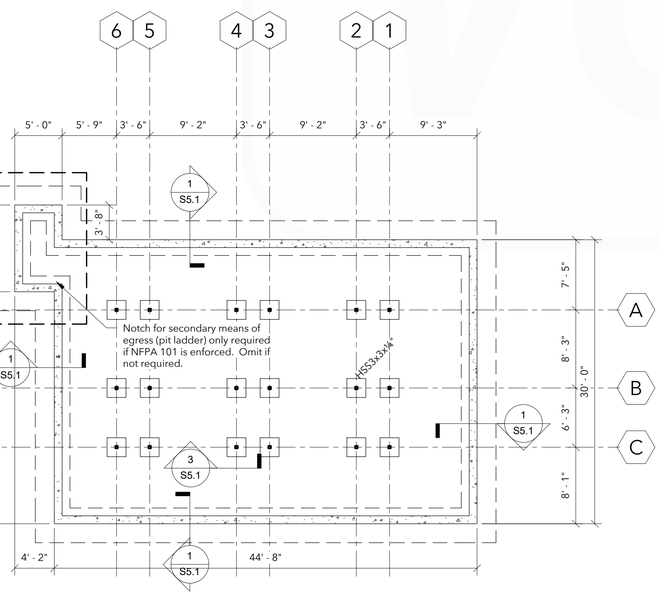

PIT FOUNDATION PLAN
1/8" = 1'-0"

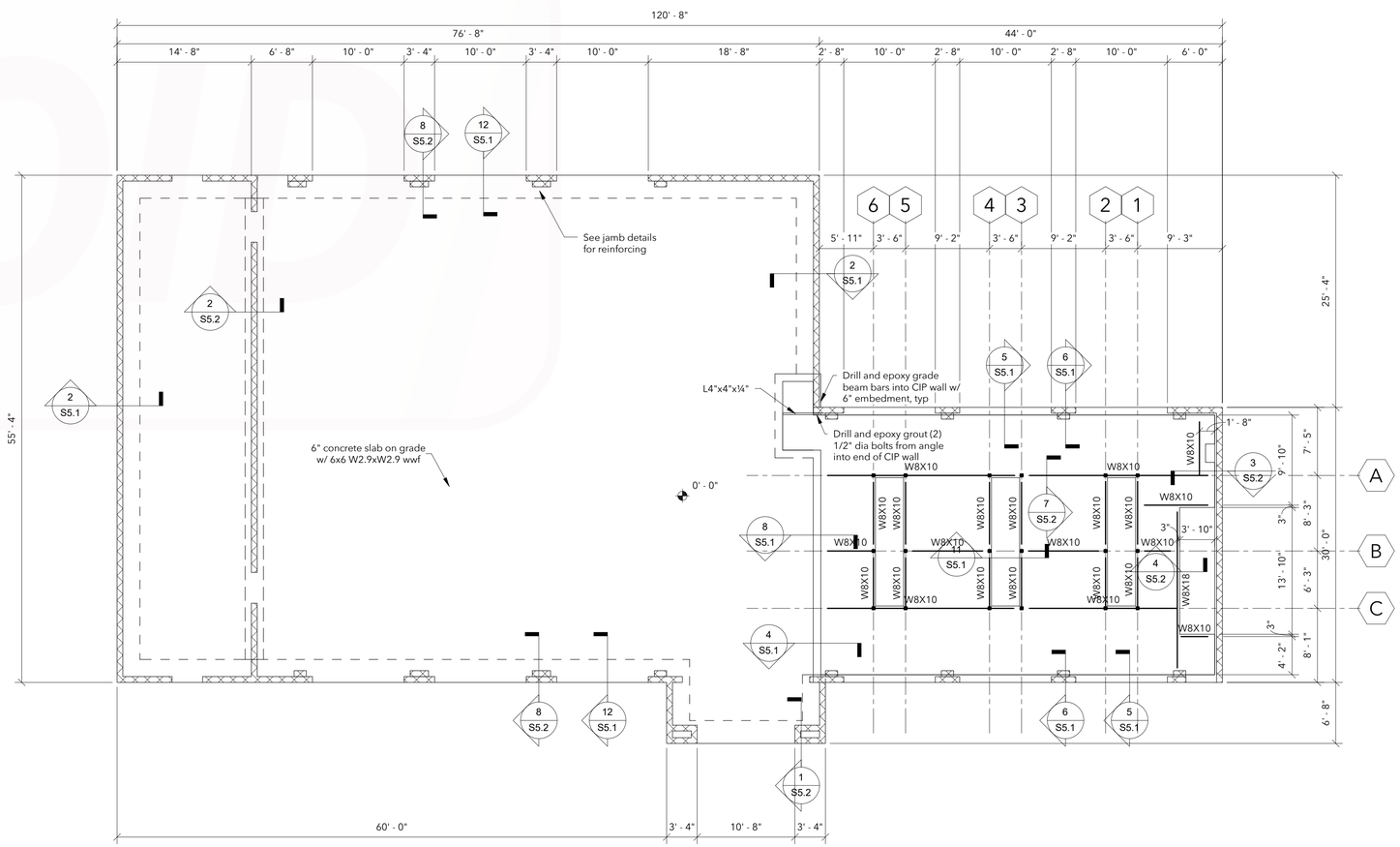

FOUNDATION PLAN
1/8" = 1'-0"

Sheet Notes:

1. See Sheet No S0 for typical details and general notes.
2. Reference all elevations to finish floor elevation (+) 0'-0"
3. Floor construction 3" concrete slab with 6x6 W2.9xW2.9 wwf over 2" x 20 ga. galvanized composite metal deck. Total slab thickness = 5". Provide 5/8" dia puddle welds on 36/4 pattern w/ (3) #12 TEK screw sidelap fasteners per span
4. All steel beam reactions shall be designed for 10 kips (ASD) unless noted otherwise.
5. Refer to architectural for all dimensions, slopes, elevations, etc. not illustrated on this plan. Coordinate all final dimensions and elevations with architectural.

AHO ARCHITECTS
a sole proprietorship
www.ahoarch.com

10/04/2024

Express Oil Change & Tire Engineers

Single Building / Right Hand Oil Change / Front Enter / Side Tire Storage

Morehead, Kentucky

FINAL

No.	Description	Date

2024
© Aho Architects, a sole proprietorship
All Rights Reserved.

Foundation Plan

VOID

Project number	24029
Date	10/04/2024
Drawn by	jcj
Checked by	jd

S1.1

Scale As indicated

JOHN JONES, PE, SE
STRUCTURAL ENGINEER
125 18TH STREET NORTH
PELL CITY, ALABAMA
205-884-5334

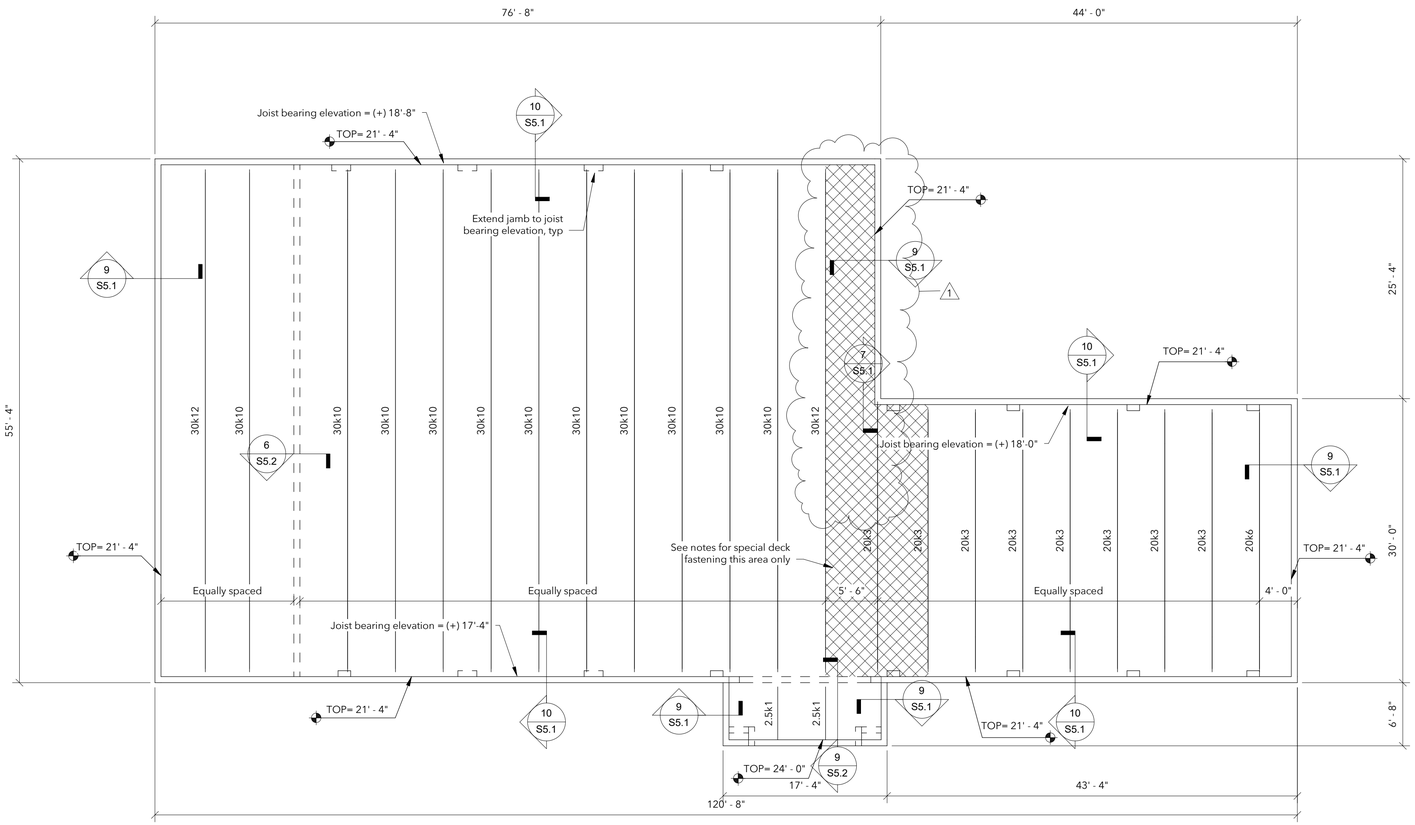

ROOF FRAMING PLAN

1/8" = 1'-0"

Sheet Notes:

1. See S0.x Sheets for typical details and general notes.
2. Reference all elevations to finish floor elevation (+) 0'-0"
3. See plan for Joist Bearing Elevations.
4. Roof construction 1 1/2" x 22 ga. type B painted metal deck. See S0.3 sheets for attachment details.
5. Refer to architectural drawings for all dimensions, slopes, elevations, etc... not illustrated on this plan. Coordinate all final dimensions and elevations with architectural.

AHO ARCHITECTS
a sole proprietorship
www.ahoarch.com

STATE OF KENTUCKY
JOHN C. JONES
28096
LICENSED
PROFESSIONAL ENGINEER

11.08.2024

Express Oil Change & Tire Engineers

Single Building / Right Hand Oil Change / Front Enter / Side Tire Storage

Morehead, Kentucky

FINAL

No.	Description	Date
1	ASI#1	11.08.24

2024
© Aho Architects, a sole proprietorship
All Rights Reserved.

Roof Framing Plan

Project number	24029
Date	10/04/2024
Drawn by	jcj
Checked by	jd

S3.1

Scale As indicated

JOHN JONES, PE, SE
STRUCTURAL ENGINEER
125 18TH STREET NORTH
PELL CITY, ALABAMA
205-884-5334

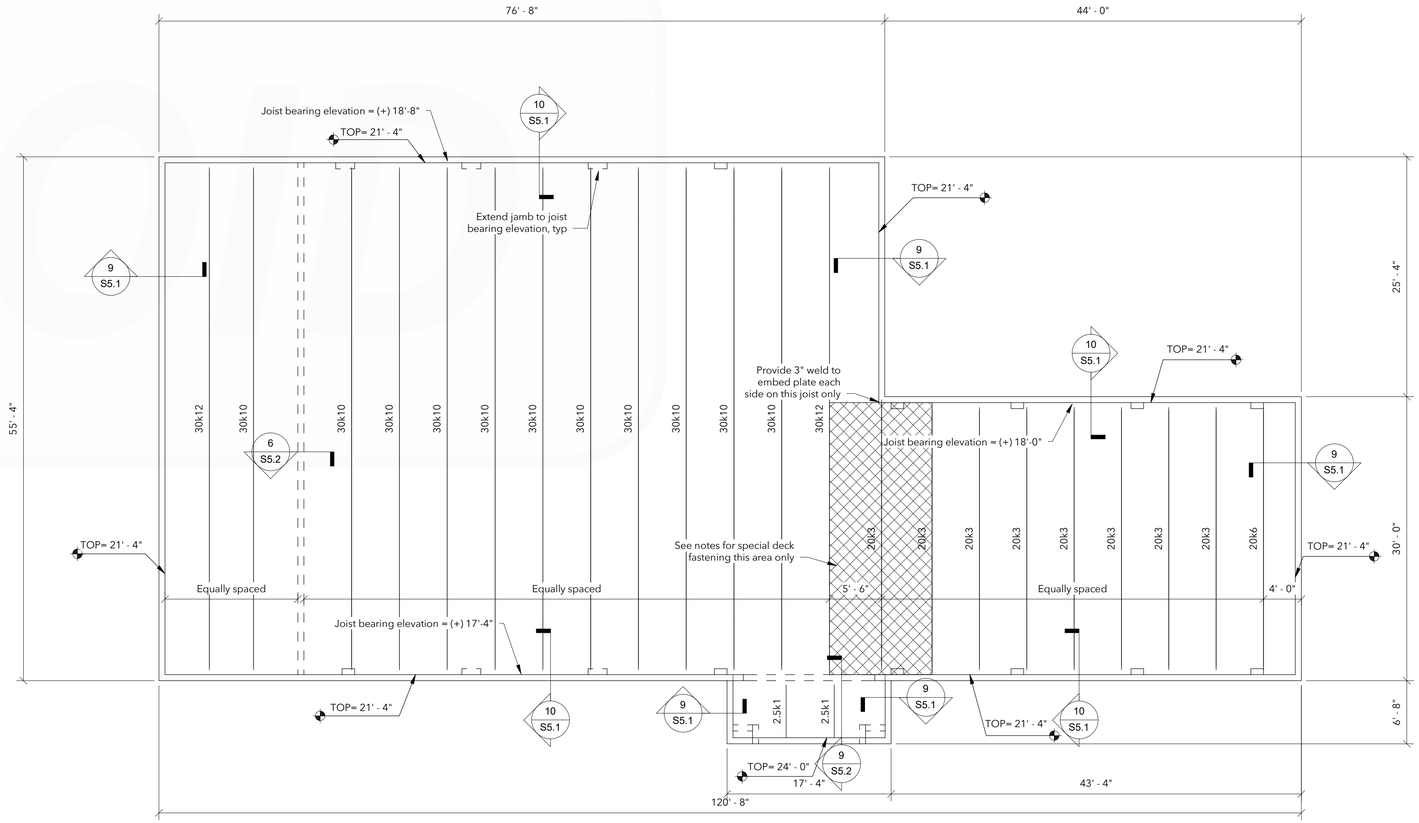

ROOF FRAMING PLAN

1/8" = 1'-0"

Sheet Notes:

1. See S0.x Sheets for typical details and general notes.
2. Reference all elevations to finish floor elevation (+) 0'-0"
3. See plan for Joist Bearing Elevations.
4. Roof construction 1 1/2" x 22 ga. type B painted metal deck. See S0.3 sheets for attachment details.
5. Refer to architectural drawings for all dimensions, slopes, elevations, etc... not illustrated on this plan. Coordinate all final dimensions and elevations with architectural.

AHO ARCHITECTS
a sole proprietorship
www.ahoarch.com

STATE OF KENTUCKY
JOHN C. JONES
28096
LICENSED PROFESSIONAL ENGINEER

10/04/2024

Express Oil Change & Tire Engineers

Single Building / Right Hand Oil Change / Front Enter / Side Tire Storage

Morehead, Kentucky

FINAL

No.	Description	Date

2024
© Aho Architects, a sole proprietorship
All Rights Reserved.

Roof Framing Plan

VOID

Project number	24029
Date	10/04/2024
Drawn by	jcj
Checked by	jd

S3.1

Scale As indicated

JOHN JONES, PE, SE
STRUCTURAL ENGINEER
125 18TH STREET NORTH
PELL CITY, ALABAMA
205-884-5334

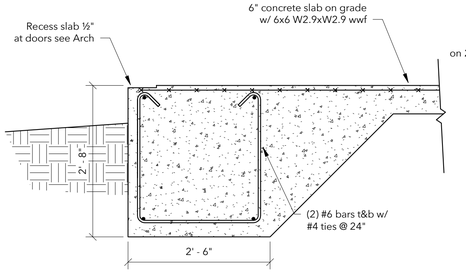

Section 12
3/4" = 1'-0"

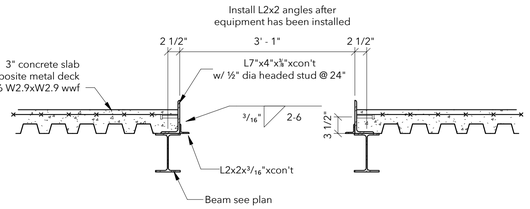

Section 11
3/4" = 1'-0"

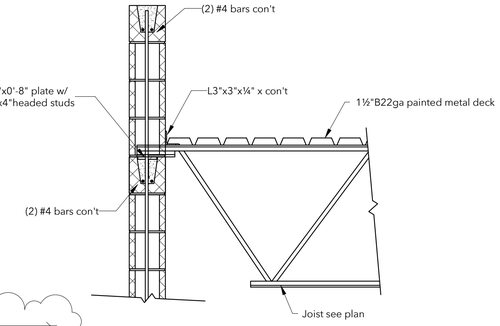

Section 10
3/4" = 1'-0"

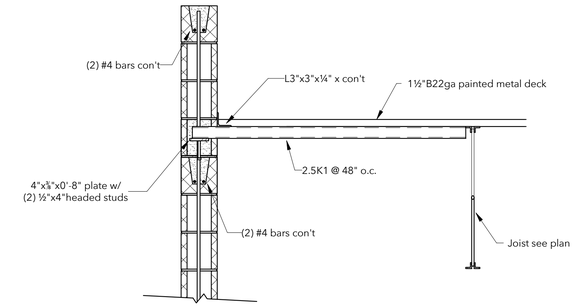

Section 9
3/4" = 1'-0"

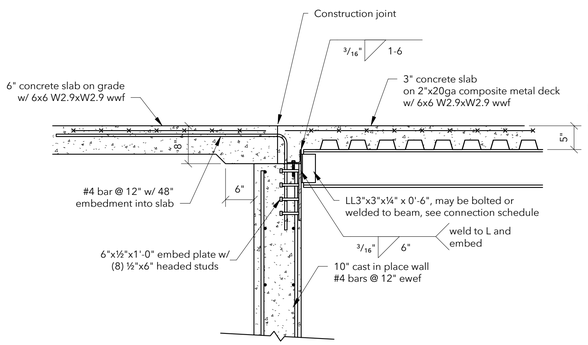

Section 8
3/4" = 1'-0"

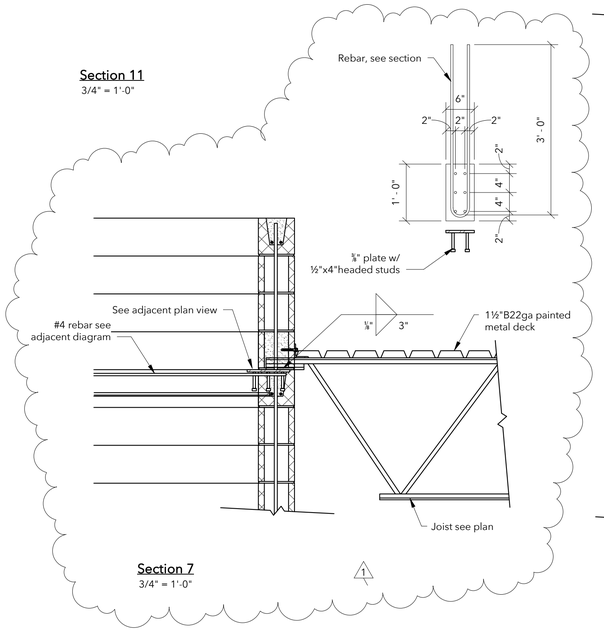

Section 7
3/4" = 1'-0"

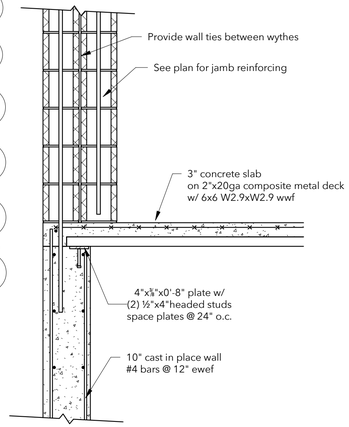

Section 6
3/4" = 1'-0"

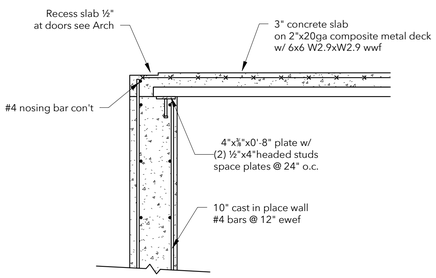

Section 5
3/4" = 1'-0"

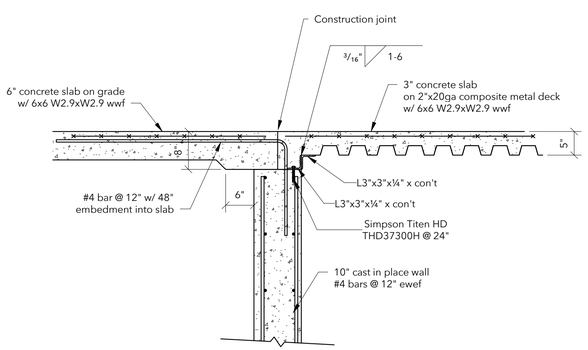

Section 4
3/4" = 1'-0"

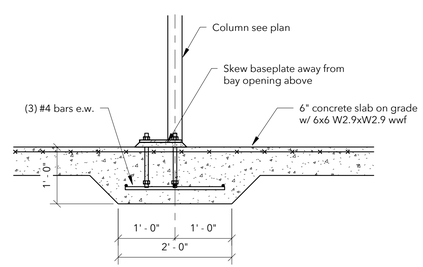

Section 3
3/4" = 1'-0"

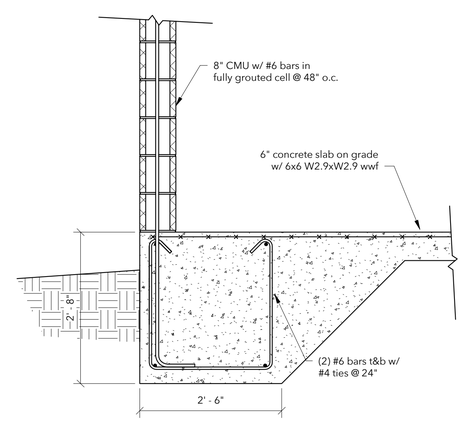

Section 2
3/4" = 1'-0"

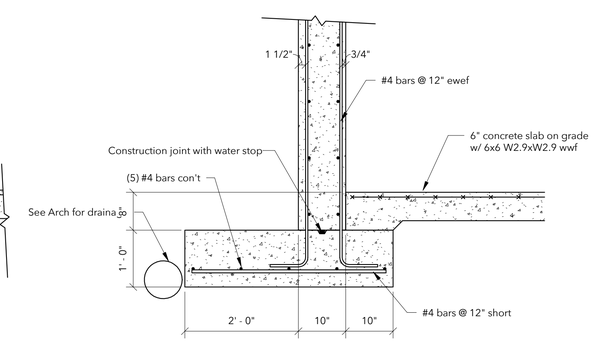

Section 1
3/4" = 1'-0"

AHO ARCHITECTS
a sole proprietorship
www.ahoarch.com

STATE OF KENTUCKY
JOHN C. JONES
28096
LICENSED
PROFESSIONAL ENGINEER
11.08.2024

Express Oil Change & Tire Engineers

Single Building / Right Hand Oil Change / Front Enter / Side Tire Storage

Morehead, Kentucky

FINAL

No.	Description	Date
1	ASI#1	11.08.24

2024
© Aho Architects, a sole proprietorship
All Rights Reserved.

Sections and Details

Project number	24029
Date	10/04/2024
Drawn by	jcj
Checked by	jd

S5.1

Scale 3/4" = 1'-0"

JOHN JONES, PE, SE
STRUCTURAL ENGINEER
125 18TH STREET NORTH
PELL CITY, ALABAMA
205-884-5334

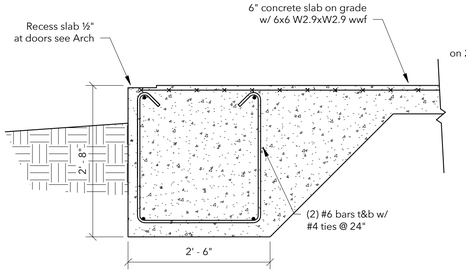

Section 12
3/4" = 1'-0"

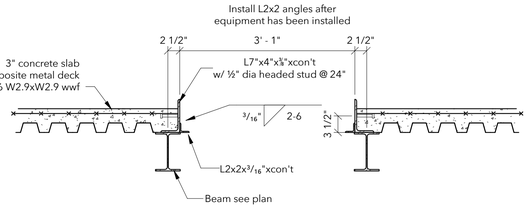

Section 11
3/4" = 1'-0"

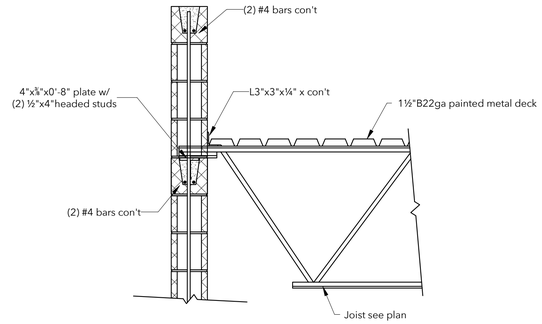

Section 10
3/4" = 1'-0"

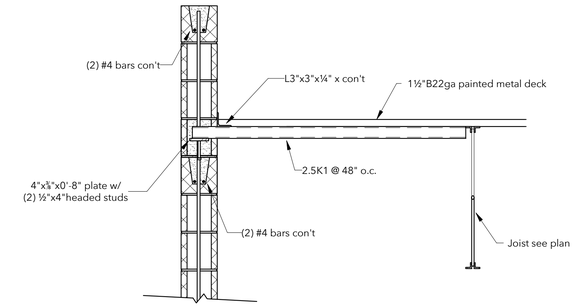

Section 9
3/4" = 1'-0"

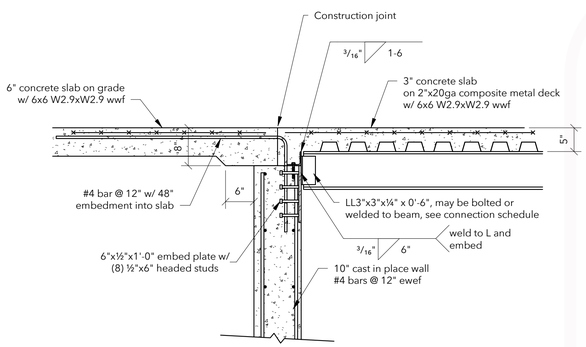

Section 8
3/4" = 1'-0"

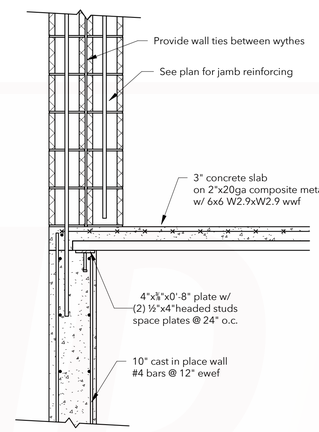

Section 6
3/4" = 1'-0"

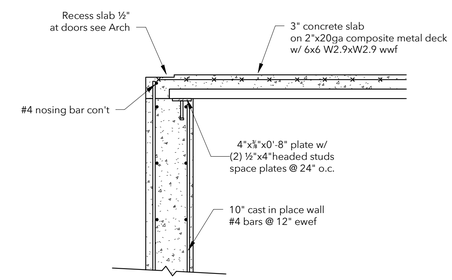

Section 5
3/4" = 1'-0"

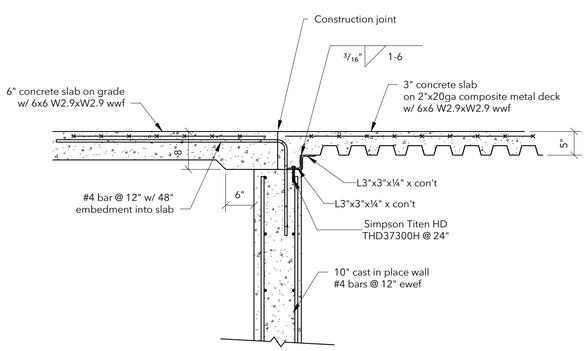

Section 4
3/4" = 1'-0"

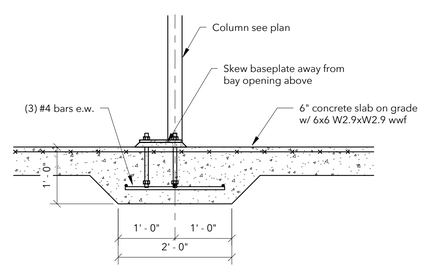

Section 3
3/4" = 1'-0"

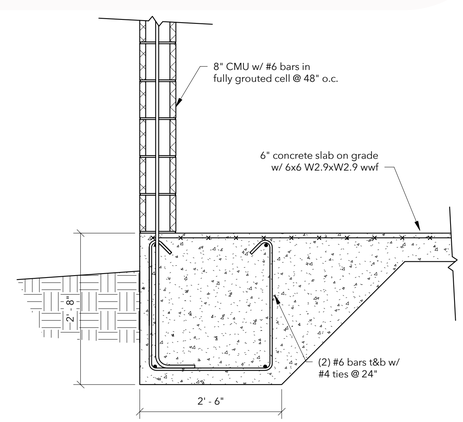

Section 2
3/4" = 1'-0"

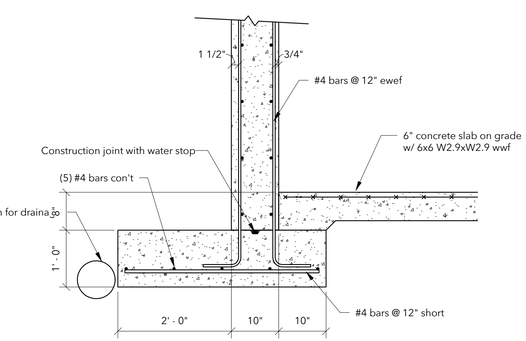

Section 1
3/4" = 1'-0"

AHO ARCHITECTS
a sole proprietorship
www.ahoarch.com

STATE OF KENTUCKY
JOHN C. JONES
28096
LICENSED
PROFESSIONAL ENGINEER
10/04/2024

Express Oil Change & Tire Engineers

Single Building / Right Hand Oil Change / Front Enter / Side Tire Storage

Morehead, Kentucky

FINAL

No.	Description	Date

2024
© Aho Architects, a sole proprietorship
All Rights Reserved.

Sections and Details

VOID

Project number	24029
Date	10/04/2024
Drawn by	jcj
Checked by	jd

S5.1

Scale 3/4" = 1'-0"

JOHN JONES, PE, SE
STRUCTURAL ENGINEER
125 18TH STREET NORTH
PELL CITY, ALABAMA
205-884-5334

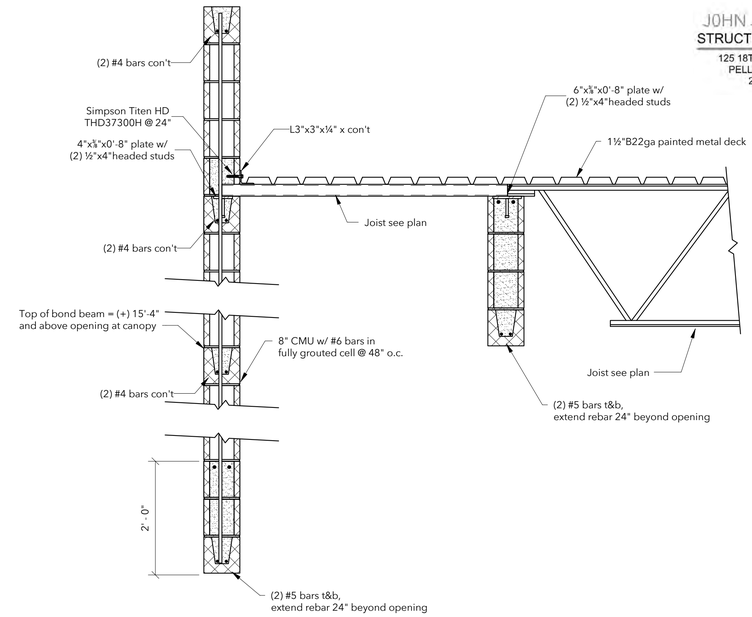

Section 9
3/4" = 1'-0"

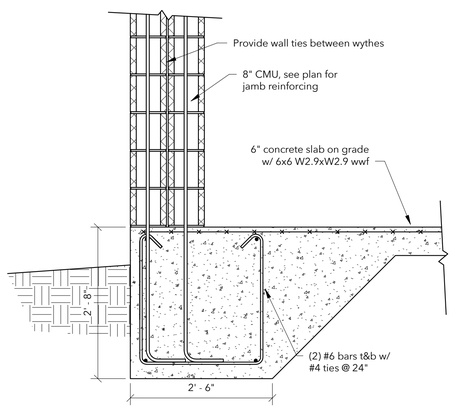

Section 8
3/4" = 1'-0"

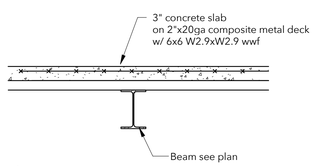

Section 7
3/4" = 1'-0"

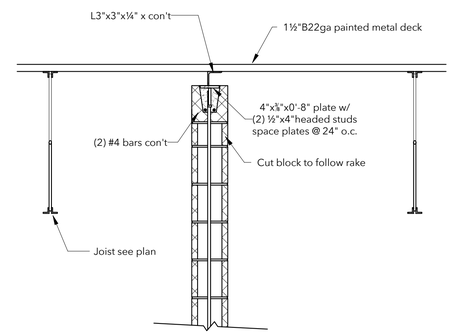

Section 6
3/4" = 1'-0"

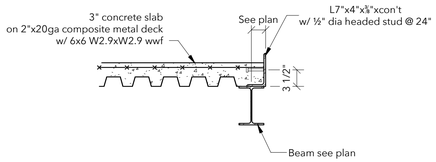

Section 4
3/4" = 1'-0"

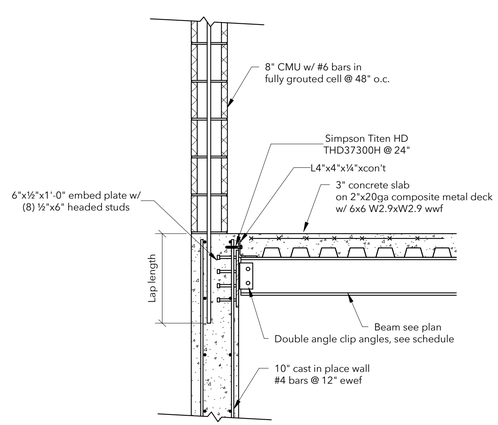

Section 3
3/4" = 1'-0"

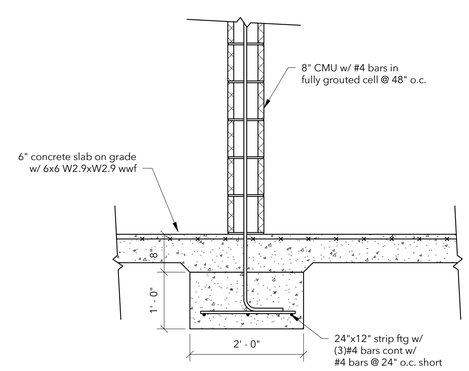

Section 2
3/4" = 1'-0"

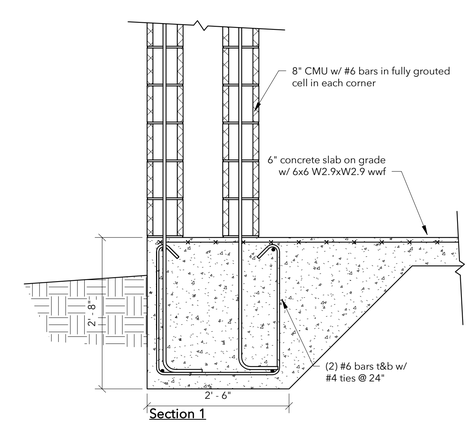

Section 1
3/4" = 1'-0"

AHO ARCHITECTS
a sole proprietorship
www.ahoarch.com

STATE OF KENTUCKY
JOHN C. JONES
P.E. 36096
LICENSED
PROFESSIONAL ENGINEER

10/04/2024

Express Oil Change & Tire Engineers

Single Building / Right Hand Oil Change / Front Enter / Side Tire Storage

Morehead, Kentucky

FINAL

No.	Description	Date

2024
© Aho Architects, a sole proprietorship
All Rights Reserved.

Sections and Details

Project number	24029
Date	10/04/2024
Drawn by	jcj
Checked by	jd

S5.2

Scale 3/4" = 1'-0"

JOHN JONES, PE, SE
STRUCTURAL ENGINEER
125 18TH STREET NORTH
PELL CITY, ALABAMA
205-884-5334

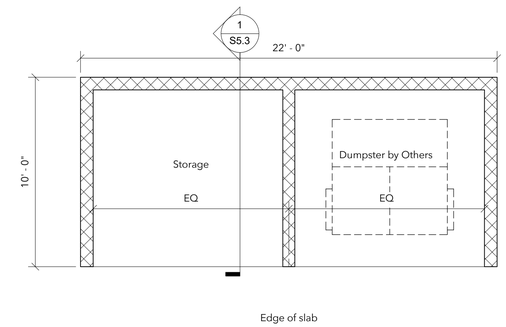

Dumpster Enclosure Plan
1/4" = 1'-0"

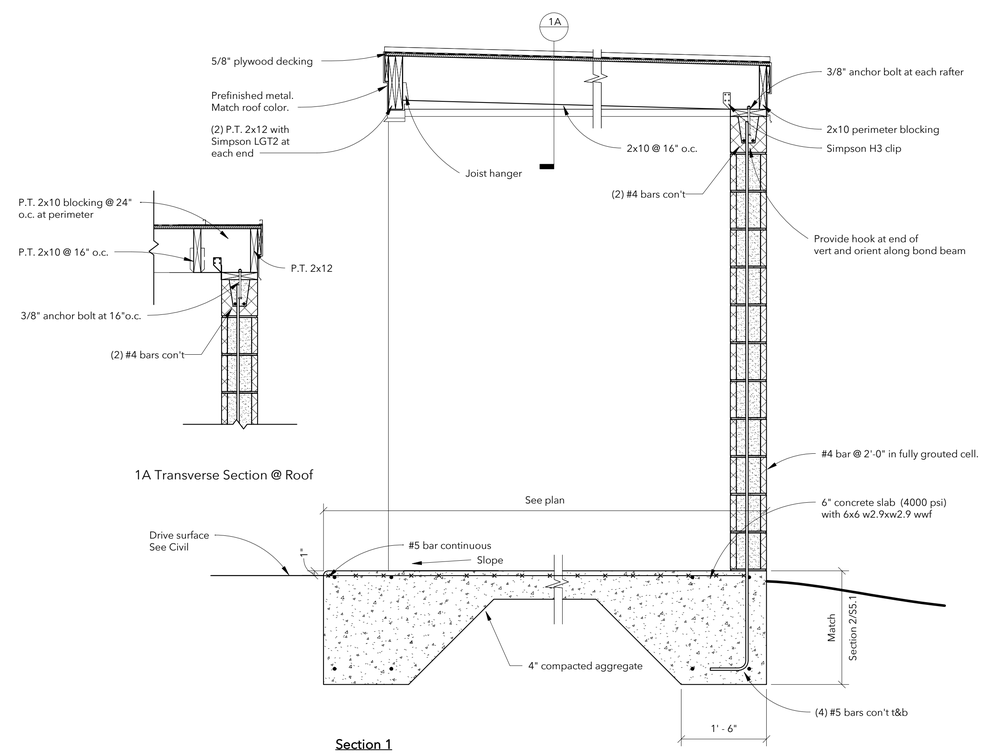

Section 1
3/4" = 1'-0"

AHO ARCHITECTS
a sole proprietorship
www.ahoarch.com

STATE OF KENTUCKY
JOHN C. JONES
36096
LICENSED
PROFESSIONAL ENGINEER

10/04/2024

Express Oil Change & Tire Engineers

Single Building / Right Hand Oil Change / Front Enter / Side Tire Storage

Morehead, Kentucky

FINAL

No.	Description	Date

2024
© Aho Architects, a sole proprietorship
All Rights Reserved.

Sections and Details

Project number	24029
Date	10/04/2024
Drawn by	jcj
Checked by	jd

S5.3

Scale	As indicated

LEGEND

- 12x20 — DUCT SIZE, FIRST FIGURE IS SIDE SHOWN INSIDE CLEAR DIMENSION UNLESS NOTED OTHERWISE
- 24x12 — LOW PRESSURE, RECTANGULAR (GALVANIZED STEEL)
- 20"ø — ROUND (GALVANIZED STEEL)
- FLEXIBLE DUCT
- R — DUCT RISE
- D — DUCT DROP
- EXISTING DUCTWORK TO REMAIN
- DUCT TRANSITION
- RECTANGULAR TO ROUND DUCT TRANSITION
- TURNING VANES
- FD — FIRE DAMPER AND SLEEVE, PROVIDE ACCESS DOOR
- SD — SMOKE DAMPER AND SLEEVE, PROVIDE ACCESS DOOR
- SD/FD — COMBINATION FIRE/SMOKE DAMPER, PROVIDE ACCESS DOOR
- MANUAL VOLUME DAMPER
- STANDARD 45° BRANCH, SUPPLY OR RETURN, NO SPLITTER
- STANDARD 45° BRANCH, SUPPLY OR RETURN, NO SPLITTER, WITH MANUAL VOLUME DAMPER
- CONICAL SPIN-IN FITTING WITH BUTTERFLY DAMPER
- GRILLE OR REGISTER, CEILING
- A — ACCESS DOOR
- D — CONDENSATE DRAIN PIPING
- AD — AUXILIARY CONDENSATE DRAIN PIPING
- R — REFRIGERANT PIPING (2 LINES TOTAL)
- ELBOW, 90° (LONG RADIUS)
- TEE
- TEE, TURNED UP
- TEE TURNED DOWN
- ELBOW, TURNED DOWN
- ELBOW, TURNED UP
- T — WALL MOUNTED THERMOSTAT
- H — WALL MOUNTED HUMIDISTAT
- S — WALL MOUNTED TEMPERATURE SENSOR
- SMOKE DETECTOR
- TIE NEW INTO EXISTING
- UC — UNDERCUT DOOR 3/4 INCHES
- SUPPLY AIR FLOW
- RETURN OR EXHAUST AIR FLOW

NOTE: THIS LEGEND IS FOR REFERENCE ONLY. ALL SYMBOLS WHICH APPEAR WITHIN THE LEGEND MAY NOT APPLY TO THIS PROJECT.

ABBREVIATIONS

AB.CL'G	ABOVE CEILING
ABV.	ABOVE
AC	ALTERNATING CURRENT
A/C	AIR COMPRESSOR
AFF	ABOVE FINISHED FLOOR
AHU	AIR HANDLING UNIT
AI	ANALOG INPUT
ALT.	ALTERNATE
AMP	AMPERE
AO	ANALOG OUTPUT
APPROX.	APPROXIMATELY
ARCH.	ARCHITECTURAL
AVG	AVERAGE
B	BOILER
BTU	BRITISH THERMAL UNIT
CFM	CUBIC FEET PER MINUTE
CH	CHILLER
CHWP	CHILLED WATER PUMP
CLG	CEILING
CT	COOLING TOWER
CU	CONDENSING UNIT
CWP	CONDENSER WATER PUMP
DEFL	DEFLECTION
DET	DETAIL
DI	DIGITAL INPUT
DIA	DIAMETER
Ø	DIAMETER
DO	DIGITAL OUTPUT
EDB	ENTERING DRY BULB
ELEC.	ELECTRICAL
ELEV.	ELEVATION
EWB	ENTERING WET BULB
EWT	ENTERING WATER TEMPERATURE
EXH	EXHAUST
EXIST.	EXISTING
°F	DEGREES FAHRENHEIT
GFF	GAS FIRED FURNACE
GPM	GALLONS PER MINUTE
FPM	FEET PER MINUTE
FPS	FEET PER SECOND
FT	FOOT OR FEET
HD.	HEAD
HP	HORSE POWER
HR	HOUR(S)
HT.	HEIGHT
HTR	HEATER
HVAC	HEATING, VENTILATION AND AIR CONDITIONING
HWP	HOT WATER PUMP
HX	HEAT EXCHANGER
HZ	FREQUENCY (HERTZ)
ID	INSIDE DIAMETER
IN.	INCHES
KW	KILOWATT
KWH	KILOWATT HOUR
MAX	MAXIMUM
MBH.	1000 BTU PER HOUR
MECH.	MECHANICAL
MFR.	MANUFACTURER
MIN	MINIMUM
NO.	NUMBER
N/A	NOT APPLICABLE
NC	NOISE CRITERIA
O.D.	OUTSIDE DIAMETER
OA	OUTSIDE AIR
⊖	OVAL DUCTWORK
ORIG.	ORIGINAL
PH.	PHASE
PIU	POWERED INDUCTION UNIT
PRESS	PRESSURE
RTN	RETURN AIR
RTU	ROOFTOP AIR HANDLING UNIT
SDC	STAND ALONE DIGITAL CONTROLLER
SENS.	SENSIBLE
SQ.	SQUARE
SPLY	SUPPLY
TEMP	TEMPERATURE
VAV	VARIABLE AIR VOLUME
W	WATT
W/	WITH
W.P.D.	WATER PRESSURE DROP

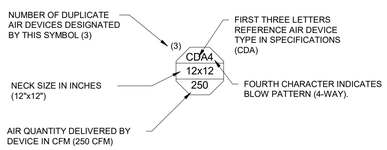

1 / MEP## — AIR DEVICE LEGEND
NO SCALE

GAS FIRED FURNACE SCHEDULE

EQUIPMENT NO.	MANUFACTURER/ MODEL NO.	CFM	O.A. CFM	E.S.P. (IN. W.C.)	FAN HP	COOLING COIL	GAS HEAT CAP. (MBH)		VENTING		ELECTRICAL			MOUNTING	WGT. (LBS)	REMARKS
							INPUT	OUTPUT	INTAKE (IN.)	DISCHARGE (IN.)	MCA	MOCP	VOLTS/PH./HZ.			
GFF-1	TRANE S9X1B040	1195	150	0.5	1/2	CC-1	40	38.8	3	3	8.8	15	115/1/60	HORIZONTAL	150	1), 2), 3)

REMARKS:
1) UNIT MOUNTED ON EQUIPMENT PLATFORM.
2) PROVIDE WITH 1" THROWAWAY FILTERS.
3) ROUTE CONDENSATE TO HUB DRAIN.

COIL SCHEDULE

EQUIPMENT NO.	MANUFACTURER/ MODEL NO.	TYPE	MAXIMUM FINS PER INCH	ROWS (MIN)	MAXIMUM FACE VEL. (FPM)	AIR						DX REFR. TYPE	REMARKS
						CFM	EDB (°F)	EWB (°F)	LDB (°F)	LWB (°F)	DELTA P (IN. W.C.)		
CC-1	TRANE 4TXCB004	DIRECT EXPANSION	--	--	--	1195	78.0	66.0	58.3	56.3	0.5	R-410A	1)

REMARKS:
1) MOUNTED ON DISCHARGE OF FURNACE UNIT

AIR COOLED CONDENSING UNIT SCHEDULE

EQUIPMENT NO.	MANUFACTURER/ MODEL NO.	SERVICE	NOMINAL CAPACITY (TONS)	ELECTRICAL				WEIGHT (LBS)	REMARKS
				DISCONNECT	MCA	MOCP	VOLTS/PH./HZ.		
CU-1	TRANE 4TTR4036	GFF-1	3.0	BY DIV. 16	18	30	208/1/60	175	1), 2), 3)

REMARKS:
1) PROVIDE LONG LINE ACCESSORIES AS REQUIRED BY MANUFACTURER.
2) UNITS SHALL BE SIZED AT 95°F AMBIENT AIR TEMPERATURE.
3) LOCATE UNIT ON HOUSEKEEPING PAD. ANCHOR UNIT TO PAD WITH EXPANSION BOLTS.

POWER VENTILATOR SCHEDULE

EQUIPMENT NO.	MANUFACTURER/ MODEL NO.	CFM	E.S.P. (IN. W.C.)	RPM	MAX. SONES	ELECTRICAL				LOCATION	TYPE	DRIVE	WGT (LBS.)	REMARKS
						DISCONNECT	MOTOR STARTER	WATTS	MOTOR VOLTS/PH./HZ.					
EF-1	COOK GC-146	70	0.35	849	1.5	BY DIV. 26	BY DIV. 23	32	115/1/60	CEILING	CENTRIFUGAL	DIRECT	15	1), 3), 5)
EF-2	COOK GC-146	70	0.35	849	1.5	BY DIV. 26	BY DIV. 23	32	115/1/60	CEILING	CENTRIFUGAL	DIRECT	15	1), 3), 5)
EF-3	COOK 150SQN17D	3000	0.35	1649	21.4	BY DIV. 26	BY DIV. 23	1 HP	115/1/60	INLINE	CENTRIFUGAL	DIRECT	120	2), 3), 6)
EF-4	COOK 24XP28D102	4200	0.25	971	15.8	BY DIV. 26	BY DIV. 23	3/4 HP	115/1/60	WALL	PROPELLER	DIRECT	150	2), 4)

REMARKS:
1) PROVIDE OCCUPANCY SENSOR FOR FAN OPERATION IN EACH RESTROOM.
2) FAN SHALL RUN CONTINUOUSLY DURING OCCUPIED HOURS. INTERLOCK WITH LOCAL SWITCH. COORDINATE WITH ELECTRICAL.
3) PROVIDE WITH FAN SPEED CONTROLLER.
4) PROVIDE WITH FAN INLET GUARDS.
5) PROVIDE WITH BACKDRAFT DAMPER.
6) PROVIDE FAN WITH EC VARIFLOW DRIVE PACKAGE.

GAS UNIT HEATER SCHEDULE

EQUIPMENT NO.	MANUFACTURER/ MODEL NO.	INPUT (MBH)	OUTPUT (MBH)	AIRFLOW CFM	WATTS	ELECTRICAL			MOUNTING	REMARKS
						DISCONNECT	MOTOR STARTER	VOLTS/PH./HZ.		
UH-1	REZNOR UDAP 175	150	124	1921	392	BY ELEC.	BY MECH.	115/1/60	12'-0"	1), 2)
UH-2	REZNOR UDAP 175	150	124	1921	392	BY ELEC.	BY MECH.	115/1/60	12'-0"	1), 2)
UH-3	REZNOR UDAP 225	225	166	2562	491	BY ELEC.	BY MECH.	115/1/60	12'-0"	1), 2)
UH-4	REZNOR UDAP 225	225	166	2562	491	BY ELEC.	BY MECH.	115/1/60	12'-0"	1), 2)

REMARKS:
1) MAINTAIN CLEARANCE PER MANUFACTURERS INSTALL DETAILS. PROVIDE WITH VENT KIT.
2) PROVIDE WITH 24V TRANSFORMER AND LOW VOLTAGE THERMOSTAT.

OUTSIDE AIR CALCULATIONS

MECHANICAL CODE OUTSIDE AIR REQUIREMENT

Served By	Space Name	Supply Air (cfm) Vpz (Max)	Area (sq. ft) Az	Occupancy Classification	Max Number of Occupants/SF (per 1000 SF)	Number of Occupants Rp	O.A. Area Air Rate (cfm / sq. ft) Ra	O.A. People Air Rate (cfm/person) Pz	O.A. Area Air Rate (cfm)	O.A. People Air Rate (cfm)	O.A. (cfm) Vbz	Zone Effectiveness Ez	Corrected CFM Voz	MAX OA REQUIRED Vot	Primary O.A. Fraction Zp	Ventilation Effectiveness Ev	Remarks
AHU-1	1 Service Writing	320	145	Lobbies	--	1	0.06	5	9	5	14	0.80	17	17	0.05	1	
	3 Waiting Room	275	129	Lobbies	--	15	0.06	5	8	75	83	0.80	103	103	0.38	0.774	
	4 Manager	125	51	Office	5	1	0.06	5	3	5	8	0.80	10	10	0.08	1	
	7 Break Room	275	61	Break Room	35	1	0.06	10	4	10	14	1.80	8	8	0.03	1	
															OA	Lowest Ev	
															138.21	1.00	

Pinnacle ENGINEERING, INC.
Engineering & Design Consultants
2111 Parkway Office Circle, Suite 125
Birmingham, AL 35244
(205) 733-6912 FAX: (205) 733-6913
Job No.24207

AHO ARCHITECTS
a sole proprietorship
www.ahoarch.com

STATE OF KENTUCKY — JEFFREY BOYER — 40070 — LICENSED PROFESSIONAL ENGINEER
10/4/24

Express Oil Change & Tire Engineers
Single Building / Right Hand Oil Change / Front Enter / Side Tire Storage
Morehead, Kentucky

FINAL

No.	Description	Date

© 2024 Aho Architects, LLC. All Rights Reserved.

Mechanical Legend, Abbreviations and Schedules

Project number	24029
Date	10/04/2024
Drawn by	CA
Checked by	JB

M0.01

Scale 12" = 1'-0"

10/7/2024 10:32:36 AM

SECTION 15010 - MECHANICAL GENERAL

A. PROVIDE EQUIPMENT, LABOR, MATERIAL, ETC., REQUIRED TO MAKE A COMPLETE WORKING INSTALLATION.
B. INSTALL THE WORK IN ACCORDANCE WITH DRAWINGS, SPECIFICATIONS AND THE STANDARDS AND CODES (LATEST EDITION) THAT APPLY TO THIS WORK. IN THE EVENT OF A CONFLICT, INSTALL WORK IN ACCORDANCE WITH THE MOST STRINGENT CODE REQUIREMENTS DETERMINED BY THE ENGINEER.
C. OBTAIN AND PAY FOR ALL PERMITS AND INSPECTIONS INCLUDING: BUILDING PERMITS, HEALTH DEPARTMENT PERMITS AND SEWER TAP PERMITS. DELIVER TO ENGINEER CERTIFICATES OF INSPECTION AND APPROVAL ISSUED BY AUTHORITIES.
D. ALL EQUIPMENT AND METHOD SHALL BE INSTALLED AND CONNECTED IN ACCORDANCE WITH THE BEST ENGINEERING PRACTICES AND IN ACCORDANCE WITH THE MANUFACTURER'S RECOMMENDATIONS.
E. DISCONNECT, REMOVE AND RE-INSTALL MECHANICAL SERVICES LOCATED ON OR CROSSING THROUGH CONTRACT LIMITS, ABOVE OR BELOW GRADE, OBSTRUCTING CONSTRUCTION OF PROJECT OR CONFLICTING WITH COMPLETED PROJECT OR ANY APPLICABLE CODES.
F. DRAWINGS AND SPECIFICATIONS ARE COMPLEMENTARY. WORK CALLED FOR BY ONE IS BINDING AS IF CALLED FOR BY BOTH.
G. DRAWINGS ARE DRAWN TO A SMALL SCALE AND ARE DIAGRAMMATIC ONLY. THE DRAWINGS INDICATE SIZE AND GENERAL ARRANGEMENT OF EQUIPMENT. DO NOT SCALE DRAWINGS FOR EXACT LOCATIONS. FIELD MEASUREMENTS TAKE PRECEDENCE.
H. PROVIDE NECESSARY OFFSETS, ELBOWS AND FITTINGS AS REQUIRED TO AVOID CONFLICT WITH EQUIPMENT OF OTHER DIVISIONS AND TO OBTAIN PROPER HEADROOM AND CLEAR PASSAGEWAYS. THIS SHALL BE DONE AT NO ADDITIONAL COST TO THE OWNER.
I. WORK UNDER THIS DIVISION SHALL BE FIRST CLASS WITH EMPHASIS ON NEATNESS AND WORKMANSHIP. INSTALL WORK USING COMPETENT MECHANICS, UNDER SUPERVISION OF FOREMAN, ALL DULY CERTIFIED BY LOCAL AUTHORITIES.
J. INSTALLATION SUBJECT TO ENGINEER'SOBSERVATION, FINAL APPROVAL, AND ACCEPTANCE. ENGINEER MAY REJECT UNSUITABLE WORK.
K. ALL MATERIALS SHALL BE NEW. ALL MATERIALS AND EQUIPMENT FOR WHICH A UL STANDARD, AN AGA APPROVAL, AN AWWA STANDARD, FM LISTING OR ASME REQUIREMENTS IS ESTABLISHED, SHALL BE SO APPROVED AND LABELED OR STAMPED.

L. THE DRAWINGS ARE BASED ON THE USE OF PRODUCTS SPECIFIED AND LISTED FIRST. IF ANY REVISION IN PIPING, CONDUIT WORK, FOUNDATIONS, ANCHOR BOLTS, CONNECTIONS, ETC., IS REQUIRED BY OTHER NAMED PRODUCTS OR APPROVED SUBSTITUTIONS, IT SHALL BE THE CONTRACTOR'S RESPONSIBILITY TO MAKE SUCH REVISIONS AT NO ADDITIONAL EXPENSE TO THE OWNER.
M. SUBMIT SIX (6) ORIGINAL COPIES OF COMPLETE SHOP DRAWINGS FOR ALL MATERIALS AND EQUIPMENT FURNISHED UNDER DIVISION 15 OF SPECIFICATIONS TO ENGINEER FOR REVIEW. SHOP DRAWINGS SHALL BEAR THE STAMP OF APPROVAL OF THE CONTRACTOR AS EVIDENCE THAT THE DRAWINGS HAVE BEEN CHECKED BY HIM. DRAWING SUBMITTED WITHOUT THIS STAMP OF APPROVAL WILL NOT BE CONSIDERED AND WILL BE RETURNED FOR PROPER RESUBMISSION.
N. REVIEW OF SHOP DRAWINGS DOES NOT RELIEVE CONTRACTOR OF RESPONSIBILITY FOR ERRORS AND OMISSIONS IN SHOP DRAWINGS. CONTRACTOR IS RESPONSIBLE FOR DIMENSIONS AND SIZES OF EQUIPMENT. INFORM ENGINEER IN WRITING OF EQUIPMENT DIFFERING FROM THAT SHOWN.
O. PROVIDE MAINTENANCE AND OPERATING MANUALS BOUND IN 8-1/2" X 11" HARDBACK, THREE-POST BINDERS. MANUALS SHALL CONTAIN WRITTEN INSTRUCTIONS FOR EACH SYSTEM, SHOP DRAWINGS, SCHEMATIC DRAWINGS, EQUIPMENT CATALOG CUTS, MANUFACTURER'S INSTRUCTIONS, MANUFACTURERS WARRANTIES, AND VALVE TAG LIST.
P. PROVIDE AS-BUILT PRINTS AT THE COMPLETION OF JOB. KEEP ONE SET OF PRINTS ON JOB AND RECORD DAY TO DAY CHANGES TO CONTRACT DRAWINGS WITH RED PENCIL. INDICATE ACTUAL LOCATION OF PIPING, DUCTWORK, VALVES, DAMPERS, AND EQUIPMENT. TURN OVER PRINTS TO ENGINEER AT FINAL OBSERVATION.
Q. FURNISH ENGINEER WRITTEN WARRANTY, STATING THAT IF WORKMANSHIP AND/OR MATERIALS EXECUTED UNDER THIS DIVISION IS PROVEN DEFECTIVE WITHIN ONE (1) YEAR AFTER FINAL ACCEPTANCE, SUCH DEFECTS AND OTHER WORK DAMAGED WILL BE REPAIRED AND/OR REPLACED.

SECTION 15050 - BASIC MATERIALS AND METHODS

A. CONCRETE HOUSEKEEPING PADS:
1. PROVIDE CONCRETE HOUSEKEEPING PADS UNDER ALL FLOOR MOUNTED EQUIPMENT, PIPE SUPPORT AND DUCT SUPPORTS AND WHERE INDICATED. CONCRETE SHALL BE 3000 PSI AT 28 DAYS MINIMUM.
2. PADS SHALL BE DOWELED TO FLOOR WITH NOT LESS THAN 4 NO. 4 BARS GROUTED IN PLACE. ANCHOR BOLTS FOR EQUIPMENT SHALL BE POURED INTEGRAL WITH THE PAD. PADS SHALL BE REINFORCED WITH AT LEAST ONE NO. 4 BAR (STIRRUPS). PADS SHALL HAVE CHAMFERED EDGES AND A BROOM FINISH.
3. HOUSEKEEPING PADS SHALL BE NOT LESS THAN 3-1/2 IN. THICK, SIZED AT LEAST 8 IN. LARGER THAN THE EQUIPMENT.
B. ACCESS PANELS:
1. ACCESS PANELS SHALL HAVE WELDED STEEL FRAME, ONE PIECE DOORS, AND SELF LATCHING DOOR LOCKS. LOCKS SHALL BE SCREW DRIVER OPERATED WITH CASE HARDENED STEEL CAM. PANELS SHALL BE MILCOR, CESCO, KARP OR EQUAL.
2. PROVIDE ACCESS PANELS IN WALLS AND CEILINGS AS NEEDED TO ALLOW ACCESS TO VALVES, EQUIPMENT, SHOCK ABSORBERS, TRAP PRIMERS, ETC. AND WHERE NOTED.
C. FIRESTOPPING AND SOUNDSTOPPING:
1. PENETRATIONS THROUGH FLOORS AND FIRE RESISTANT WALLS SHALL BE SEALED TO THE RATED FIRE RESISTANCE EQUAL TO THE WALL. INSTALLATION SHALL BE DONE BY A QUALIFIED INSTALLER, APPROVED BY THE MANUFACTURER.
2. IN AN EXISTING BUILDING ALL PENETRATIONS THROUGH FLOORS AND FIRE RESISTANT WALLS SHALL BE SEALED AT THE END OF EACH WORKING DAY. THESE CLOSURES SHALL HAVE AN EQUAL FIRE RESISTANCE RATING TO THE FLOOR OR WALL.
3. PROVIDE SOUND PROOFING THROUGH NON-RATED WALLS.
D. PIPING SEALS:
1. PROVIDE MODULAR, RESILIENT SEALS AROUND PIPES PENETRATING ALL EXTERIOR WALLS, AND FLOORS BELOW GRADE. PIPING SEALS SHALL BE THUNDERLINE CORP. "LINK SEAL" LS SERIES.
E. CUTTING AND PATCHING:
1. CONTRACTOR SHALL BE RESPONSIBLE FOR CUTTING AND PATCHING. CUT WALLS, FLOORS, CEILINGS, PARTITIONS, ETC., REQUIRED FOR THE INSTALLATION OF THIS WORK IN A NEAT AND CAREFUL MANNER. CORE DRILL FOR PIPE SLEEVES AND OTHER OPENINGS THROUGH FLOORS AND WALLS. SAWCUT LARGER OPENINGS. CUTTING SHALL BE KEPT TO A MINIMUM.
2. REPLACE OR REPAIR DUCTWORK, CONDUIT, PIPING, ETC., THAT IS CUT. PATCH AROUND OPENING CUT BY THIS CONTRACTOR OR PROVIDED BY OTHERS FOR HIM. PATCHING SHALL BE DONE BY AN APPROVED QUALIFIED CONTRACTOR, BUT SHALL BE PAID FOR BY THIS CONTRACTOR. FINISHED PATCHING SHALL RETAIN FIRE AND SMOKE RATINGS OF THE ASSEMBLY AND SHALL MATCH SURROUNDING FINISH.
F. ANCHORS:
1. MOUNT ALL EQUIPMENT, BRACKETS, HANGERS, ANCHORS, ETC. TO SAFELY RESIST THE VIBRATION OR THRUST FORCES AND SUPPORT THE UNIT'S WEIGHT.
2. FLOOR MOUNTED ROTATING OR VIBRATING EQUIPMENT SHALL BE ANCHORED TO THE FLOOR USING GROUTED-IN-PLACE OR CAST-IN-PLACE ANCHOR BOLTS WITH THREE INCH HOOK AND SLEEVE. ANCHOR BOLTS SHALL BE OF THE SIZE RECOMMENDED BY THE MANUFACTURER.
3. FLOOR MOUNTED STATIC ITEMS, WALL AND CEILING MOUNTED EQUIPMENT BRACKET AND HANGERS SHALL BE INSTALLED USING DRILLED ANCHORS. ANCHORS SHALL BE PHILLIPS DRILL COMPANY "RED HEAD" OR MULTI-SET II. SIZE ANCHORS FOR FOUR TIMES THE APPLIED LOAD. BOLTS USED OUTDOORS OR IN A WET ENVIRONMENT SHALL BE HOT DIP GALVANIZED.
G. PIPE IDENTIFICATION:
1. IDENTIFICATION SHALL BE IN ACCORDANCE WITH ANSI-A13.1. PIPE MARKERS SHALL BE SETON'S WEATHER-CODE OR EQUAL.
2. PROVIDE PIPE MARKERS AND DIRECTIONAL ARROWS ON PIPES AT BOTH SIDES OF PARTITIONS AND FLOORS SLABS, AT BRANCH LINE TAKE-OFFS, AT VALVES, AT INTERMEDIATE INTERVALS NOT IN EXCESS OF 20 FT. AND AT CONNECTIONS TO EQUIPMENT.
3. TAPE COLOR BAND IDENTIFYING MARKERS AND ARROWS ON EACH PIPE, BOTH INSULATED AND BARE PIPES. PIPE MARKERS AND ARROWS SHALL BE LOCATED WHERE READILY VISIBLE AND ON LOWER QUADRANTS OF OVERHEAD PIPES.
H. VALVE TAG AND CHART:
1. VALVE TAGS SHALL BE SETON M4506, BLACK FILLED LETTERS WITH BRASS JACK CHAIN. ONE VALVE NUMBER SHALL BE STAMPED ON EACH TAG. IDENTIFY EACH VALVE TAG FOR THE UTILITY IT SERVES, SUCH AS "CW" FOR COLD WATER, HW FOR HOT WATER, ETC. VALVE CHARTS SHALL BE SETON. ATTACH A NUMBERED VALVE TAG TO EACH VALVE.
2. PROVIDE A TYPE WRITTEN CHART IN FRAME UNDER GLASS COVER, GIVING THE FULL LIST OF ALL VALVES INSTALLED UNDER THIS CONTRACT. CHART SHALL LIST VALVE NUMBER, TYPE OF UTILITY, AND LOCATION. MOUNT CHART WHERE DIRECTED BY OWNER. PROVIDE ONE ADDITIONAL COPY TO OWNER.
I. EQUIPMENT IDENTIFICATION:
1. IDENTIFY EACH PIECE OF EQUIPMENT WITH A 1/8 INCH THICK ENGRAVED MELAMINE PLASTIC LAMINATE NAMEPLATE. LETTERS SHALL BE 1/2 INCH HIGH STANDARD STYLE. NAMES, ABBREVIATIONS, AND NUMBERING SHALL AGREE WITH THE CORRESPONDING EQUIPMENT DESIGNATIONS SHOWN ON THE DRAWINGS. USE BLACK LETTERS CUT IN A WHITE BACKGROUND FOR ALL EQUIPMENT ON STANDARD ELECTRICAL POWER
2. FASTEN NAMEPLATES TO EQUIPMENT IN A CONSPICUOUS LOCATION USING SELF-TAPPING STAINLESS STEEL SCREWS, EXCEPT USE CONTACT EPOXY ADHESIVE WHERE SCREWS CANNOT OR SHOULD NOT PENETRATE SUBSTRATE.
J. PIPE SLEEVES:
1. PROVIDE PIPE SLEEVES WHERE PIPES PASS THROUGH FLOORS AND WALLS ABOVE OR BELOW CEILINGS. PROVIDE PIPE SLEEVES IN NEW WALLS AND FLOORS AS THE WORK PROGRESSES. PROVIDE SPLIT PIPE SLEEVES IN NEW WALLS BUILT UP AROUND EXISTING PIPES. TACK WELD SPLIT SLEEVES TOGETHER.
2. SIZE PIPE SLEEVES TO ALLOW CONTINUOUS INSULATION, BUT NOT LESS THAN TWO PIPE SIZES LARGER THAN PIPE. SLEEVES IN WALLS SHALL BE FLUSH WITH WALL, SLEEVES IN FLOORS SHALL EXTEND 3/4 INCHES ABOVE FLOOR AND BE FLUSH WITH STRUCTURE BELOW.
3. SLEEVES IN CONCRETE WALLS, FLOORS OR MASONRY SHALL BE SCH 40 STEEL PIPE, MACHINE CUT. SLEEVES IN GYPSUM BOARD OR PLASTER WALLS SHALL BE 14 GAUGE, ROLLED GALVANIZED SHEET METAL TACK WELDED ON THE LONGITUDINAL SEAM.
4. PROVIDE PLATES AROUND PIPES EXTENDING INTO EXPOSED AREAS WHERE THEY PASS THROUGH WALLS, FLOORS AND CEILINGS. SIZE PLATES TO COMPLETELY COVER PIPE SLEEVES. PLATES SHALL BE BEATON AND CADWELL, KEENEY OR GRINNELL, NICKEL PLATED STEEL, SPLIT PLATES WITH SET SCREW. CONCRETE FLOOR PLATE SHALL BE GRINNELL FIGURE 400.
K. FLASHING:
1. PROVIDE FLASHING AT PIPING AND DUCT PENETRATIONS THROUGH ROOF AND ROOF MOUNTED STRUCTURES FURNISHED UNDER THIS DIVISION. FLASH IN ACCORDANCE WITH ROOFING MANUFACTURERS DETAILS. FLASHING MATERIALS SHALL BE IN ACCORDANCE WITH THE ROOFING MANUFACTURERS SYSTEM.
2. PROVIDE FLASHING AT PIPES PASSING THROUGH FLOORS WITH WATERPROOF MEMBRANE. FLASHING SHALL BE IN ACCORDANCE WITH WATERPROOFING MANUFACTURER'S DETAILS.

SECTION 15260 - HVAC INSULATION

A. GENERAL:
1. ALL INSULATION, JACKETING, AND ADHESIVE SHALL HAVE COMPOSITE SURFACE BURNING CHARACTERISTIC RATING AS TESTED BY ASTM E 84, UL 723, OR NFPA 255 NOT EXCEEDING A FLAME SPREAD OF 25 OR SMOKE DEVELOPED OF 50.
2. SUBMITTALS SHALL USE PAGES FROM MIDWEST INSULATION CONTRACTORS ASSOCIATION - ACOMMERCIAL AND INDUSTRIAL INSULATION STANDARDS@ FOR DEFINING HOW INSULATION MATERIALS WILL BE APPLIED.
3. ALL PIPE OR DUCT INSULATION SHALL BE CONTINUOUS THROUGH WALLS, CEILING OR FLOOR OPENINGS, OR SLEEVES; EXCEPT WHERE FIRESTOP OR FIRESAFING MATERIALS ARE REQUIRED.
4. INSULATE ITEMS MOUNTED IN DUCTWORK WITH THE SAME THICKNESS OF INSULATION AS SPECIFIED FOR DUCTWORK: INCLUDING AIR MEASURING STATIONS, SMOKE DAMPERS, AND AUTOMATIC DAMPERS.
5. REPAIR INSULATION DAMAGED BY WORK UNDER THIS CONTRACT TO MATCH EXISTING WORK OR REPLACE DAMAGED PORTION WITH INSULATION SPECIFIED FOR NEW WORK.
B. ELASTOMERIC CLOSED CELL INSULATION:
1. INSULATION SHALL BE RUBATEX OR ARMSTRONG. SECURE INSULATION WITH CONTACT ADHESIVE IN ACCORDANCE WITH MANUFACTURERS INSTRUCTIONS. EXPOSED OR EXTERIOR INSTALLATIONS SHALL BE PAINTED WITH TWO COATS OF WATER BASE LATEX ENAMEL.
2. PROVIDE 1 IN. THICK INSULATION ON DX REFRIGERANT PIPING, COOLING COIL CONDENATE PIPING, CHILLED WATER RUN-OUTS TO TERMINAL DEVICES, COVERS AND CAPS FOR ALL VALVE STEMS AND OPERATORS, GAUGE COCKS, THERMOMETER WELLS AND OTHER APPURTENANCES SUBJECT TO SWEATING.
C. CONCEALED DUCTWORK:
1. DUCT WRAP SHALL BE 2 IN. THICK, 1.0 PCF WITH ALUMINUM OR FRK FACING, HAVING A MAXIMUM VAPOR TRANSMISSION OF .02 PERMS. MINIMUM INSTALLED "R" VALUE SHALL BE 5.6 WITH 25% COMPRESSION. INSULATION SHALL BE 250 DEG. F RATED AS MANUFACTURED BY OWENS CORNING, MANVILLE, KNAUF, OR CERTAINTEED.
2. APPLY JACKETED DUCTWRAP TO ALL CONCEALED DUCTWORK PROVIDING CONDITIONED AIR, OR OUTSIDE AIR. ONLY INSULATE RETURN DUCTWORK IN NON-CONDITIONED SPACES AND IN CEILING SPACES BELOW A ROOF. PULL INSULATION SNUG, BUT DO NOT COMPRESS INSULATION MORE THAN 1/4 INCH.
3. SECURE DUCTWRAP INSULATION TO DUCTWORK USING ADHESIVE. SECURE INSULATION ON BOTTOM ON SIDES OF HORIZONTAL DUCTWORK AND ALL SIDES OF VERTICAL DUCTWORK WITH INSULPINS WELDED TO DUCT ON 12 TO 18 INCH CENTERS AND WITH CLIPS SLIPPED OVER THE PINS. APPLY CLIPS WITHOUT COMPRESSING INSULATION. MAKE JOINTS BY LAPPING THE FACING A MINIMUM OF 2 INCH AND STAPLING WITH T-5 FLARED STAPLES. VAPOR - SEAL WITH CHILDERS CP-30 LOW ODOR AT ALL STAPLES, CLIP LOCATIONS AND OTHER PENETRATIONS. SEAL JOINTS WITH 3 INCH WIDE FSK TAPE.
4. FOR DUCTWORK INSIDE THERMAL ENVELOPE, INSULATION SHALL BE 2 IN. THICK. FOR DUCTWORK OUTSIDE THE THERMAL ENVELOPE, ALL DUCTWORK EXCEPT EXHAUST SHALL BE 4 IN. THICK (2 LAYERS).
D. EXPOSED DUCTWORK:
1. INSULATION BOARD SHALL BE 2 IN. THICK 3 PCF WITH FRK FACING. MINIMUM INSTALLED "R" VALUE 6. INSULATION SHALL BE 250 DEG. F RATED AS MANUFACTURED BY OWENS CORNING, MANVILLE, KNAUF, OR CERTAINTEED.
2. APPLY 2 IN. THICK INSULATION BOARD WITH FRK FACING TO ALL EXPOSED DUCTWORK PROVIDING CONDITIONED AIR, OR OUTSIDE AIR. INSULATE RETURN DUCTWORK IN NON-CONDITIONED SPACES.
3. SECURE INSULATION WITH INSULPINS (ALL SURFACES) WELDED TO DUCT ON 12 TO 18 IN. CENTERS AND WITH CLIPS SLIPPED OVER PINS. SEAMS AND JOINTS SHALL BE VAPOR SEALED WITH 3 IN. WIDE FSK TAPE. CORNERS AND EDGES OF DUCTWORK SHALL BE REINFORCED WITH ROLL-ON CORNER BEAD. SEAL ALL BREAK AND PUNCTURES WITH VAPOR BARRIER SEALANT AND FSK TAPE.
E. PIPING FINISHES:
1. METAL JACKETING SHALL BE, SMOOTH .016 IN. THICK, TYPE T 3003 ALUMINUM WITH LAMINATED MOISTURE BARRIER. JACKETING SHALL BE CHILDERS, ALUMINUM ROLL JACKETING WITH POLYKRAFT MOISTURE BARRIER. COVER THE FOLLOWING INSULATED SYSTEMS WITH METAL JACKETING: PIPING INSTALLED OUTDOORS. METAL FITTING COVERS SHALL BE TWO PIECE ALUMINUM. COVERS SHALL BE ELL-JAC.
2. CONCEALED PIPING FINISH COVERING SHALL BE THE ALL SERVICE JACKET. FITTINGS SHALL BE COVERED BY WRAPPING THE FITTING WITH FIBER REINFORCED TAPE, WITH A 5 PERCENT OVERLAP. FITTING COVERS SHALL BE ONE PIECE 20 MIL PVC. COVERS SHALL BE CEEL-TITE 550 PVC-UVR BY CEEL-CO OR EQUALS.
A. DUCTWORK FINISHES:
INSULATED DUCTWORK INSTALLED OUTDOORS, INSULATED DUCTWORK WITHIN 8 FT. OF THE FINISHED FLOOR IN A MECHANICAL ROOM SHALL BE COVERED WITH 30 GAUGE GALVANIZED STEEL. COVERING SHALL BE HEMMED, AND FLANGED. SECURE WITH SELF TAPPING SCREWS ON EIGHT INCH CENTERS. DO NOT PUNCTURE VAPOR BARRIER

SECTION 15535 - REFRIGERANT PIPING SYSTEMS

A. REFRIGERANT PIPING SHALL BE TYPE L, HARD DRAWN COPPER TUBING CONFORMING TO ASTM SPECIFICATION B-280, CLEANED AND CAPPED AND MARKED "ACR". FITTINGS FOR REFRIGERANT LINES SHALL BE AS WROUGHT COPPER OR FORGED BRASS CONFORMING TO ANSI/ASME STANDARD B16.22. JOINTS IN REFRIGERANT LINES SHALL BE BRAZED IN ACCORDANCE WITH ANSI B9.1. KEEP REFRIGERATION PIPING SEALED UNTIL IT IS USED. CAP OPEN ENDS OF INSTALLED PIPING UNTIL READY FOR FINAL CONNECTIONS.
B. THE REFRIGERATION SYSTEM PIPING AND ACCESSORIES SHALL BE INSTALLED IN ACCORDANCE WITH THE SAFETY CODE FOR MECHANICAL REFRIGERATION ANSI/ASHRAE 15-92 AND THE REFRIGERATION PIPING CODE ANSI/ASME B31.5. THE REFRIGERANT TUBE SIZES, AND INSTALLATION OF TUBING SHALL BE IN ACCORDANCE WITH THE EQUIPMENT MANUFACTURER'S RECOMMENDATIONS.
C. REFRIGERANT SUCTION LINE SIZE SHALL LIMIT THE TEMPERATURE RISE TO TWO DEGREES F AT FULL LOAD AND HOLD THE REFRIGERANT GAS VELOCITY TO NOT LESS THAN 500 FT. PER MIN. (FPM) IN THE HORIZONTAL NOR LESS THAN 1000 FPM IN THE VERTICAL AT MINIMUM LOAD. REFRIGERANT LIQUID LINE SIZE SHALL LIMIT THE PRESSURE DROP BETWEEN 4 AND 6 PSI AT FULL LOAD.
D. PITCH HOT GAS LINES AND SUCTION LINES APPROXIMATELY 1/8 INCH PER 10 FT. HOT GAS LINES AND SUCTION LINES EXCEEDING 30 FT. VERTICAL LIFT SHALL BE TRAPPED EVERY 20 FT. VERTICAL REFRIGERANT LINES SHALL BE RUN PLUMB, HORIZONTAL LINES SHALL RUN PARALLEL WITH BUILDING WALLS. REFRIGERANT LINES SHALL NOT CONTACT BUILDING STRUCTURE. ISOLATE PIPING WITH RESILIENT LINER IN PIPE SUPPORT OR ELASTOMERIC INSULATION.
E. TEST FOR LEAKS WITH AN ELECTRONIC LEAK DETECTOR. REPAIR LEAKS, REFILL, REPRESSURIZE, AND RETEST. FOLLOW STANDARD CHARGING AND DEHYDRATION PROCEDURES. CHARGE THROUGH THE SYSTEM FILTER-DRIER. CHANGE FILTER DRIERS AFTER 40 HOURS OF OPERATION.
F. PROVIDE A LINE SIZE FILTER-DRIER IN EACH LIQUID REFRIGERANT LINE BETWEEN THE CONDENSER AND THE EXPANSION VALVE. FILTER-DRIER SHALL BE A HENRY VALVE CO., SPORLAN OR ALCO.
G. SERVICE VALVES SHALL BE BACK SEATING TYPE, STEEL OR IRON BODY. PROVIDE SERVICE VALVES AT CONDENSING UNIT. SERVICE VALVES SHALL BE LINES SIZE. VALVES SHALL BE HENRY VALVE CO., COMPRESSOR VALVES, SPORLAN OR ALCO.
H. PROVIDE ISOLATION VALVES AROUND THE FILTER-DRIER TO PERMIT SERVICING THE DRIER WITHOUT LOSS OF REFRIGERANT. ISOLATION VALVES SHALL BE HENRY VALVE CO., 900 SERIES BALL VALVES. SPORLAN AND ALCO ARE APPROVED EQUAL.
I. CHARGING VALVE SHALL BE INSTALLED IN EACH LIQUID REFRIGERANT LINE BETWEEN THE CONDENSER AND THE FILTER DRIER. CHARGING VALVE SHALL BE A HENRY VALVE CO. TYPE 927 OR APPROVED EQUAL. SPORLAN AND ALCO ARE APPROVED EQUAL.

J. SIGHT GLASS SHALL BE INSTALLED IN EACH LIQUID REFRIGERANT LINE AT THE EVAPORATOR COIL. SIGHT GLASS SHALL BE HENRY VALVE CO. MI 31 SERIES DOUBLE PORT STYLE WITH EXTENDED ENDS FOR SOLDERING FOR LINES 5/8 INCH OD OR LARGER. USE MI 30 SERIES SINGLE PORT SOLDERING FOR LINES 5/8 INCH OD OR LARGER. USE MI 30 SERIES SINGLE PORT FOR LINES 1/2 INCH OD AND SMALLER. SPORLAN AND ALCO ARE APPROVED EQUAL.
K. PROVIDE BALANCED EXTERNALLY EQUALIZED THERMOSTATIC EXPANSION VALVE. DISTRIBUTORS SHALL BE MATCHED WITH THERMOSTATIC EXPANSION VALVES AND DIRECT EXPANSION COIL FOR PROPER PERFORMANCE. THERMOSTATIC EXPANSION VALVE (TXV) SHALL BE BALANCED EXTERNALLY EQUALIZED TYPE. DISTRIBUTIONS SHALL BE MATCHED WITH THERMOSTATIC EXPANSION VALVES AND DIRECT EXPANSION COIL FOR PROPER PERFORMANCE. DISTRIBUTORS SHALL BE ALCO OR APPROVED EQUAL. LOCATE BULB IN ACCORDANCE WITH MANUFACTURERS RECOMMENDATIONS. CONNECT THE EQUALIZING LINE TO THE TXV DOWN STREAM OF THE BULB. PROVIDE TRAPPED DOUBLE SUCTION RISERS ON SYSTEMS WITH UNLOADING CAPABILITY, WHEN REQUIRED FOR PROPER OIL RETURN.
L. PROVIDE FLEXIBLE CONNECTORS ON LIQUID LINE, AND SUCTION LINE AT THE CONDENSING UNIT. FLEXIBLE CONNECTORS SHALL BE BRAIDED BRONZE COVERING ON A BRONZE HOSE. END CONNECTORS SHALL BE FEMALE COPPER TUBE TYPE. UNITS SHALL BE RATED NOT LESS THAN 270 PSI AT 250 DEGREES F. UNITS SHALL BE SOUTHEASTERN HOSE, INC., SUPERIOR OR ANACONDA.

SECTION 15620 - DIRECT VENT GAS-FIRED FURNACES

A. GAS-FIRED FURNACES SHALL BE COMPLETELY FACTORY ASSEMBLED INCLUDING COIL, CONDENSATE DRAIN PAN, FURNACE SECTION, FAN MOTOR(S), FILTERS AND CONTROLS IN AN INSULATED CASING THAT CAN BE APPLIED IN EITHER VERTICAL OR HORIZONTAL CONFIGURATION. UNITS SHALL BE RATED AND TESTED IN ACCORDANCE WITH ARI STANDARD 210. UNITS SHALL BE UL LISTED AND LABELED IN ACCORDANCE WITH UL 465 AND 559 FOR INDOOR BLOWER COIL UNITS AND SHALL BE AGA CERTIFIED.

B. UNIT CASING SHALL BE CONSTRUCTED OF ZINC COATED, MINIMUM 20 GAUGE, GALVANIZED STEEL. EXTERIOR SURFACES SHALL BE FINISHED WITH A WEATHER-RESISTANT BAKED ENAMEL FINISH. CASING SHALL BE COMPLETELY INSULATED WITH FIRE-RETARDANT, PERMANENT, ODORLESS GLASS FIBER MATERIAL. KNOCKOUTS SHALL BE PROVIDED FOR UNIT ELECTRIC POWER AND REFRIGERANT PIPING CONNECTIONS. CAPTIVE SCREWS SHALL BE STANDARD ON ALL ACCESS PANELS.

C. FURNACE HEAT EXCHANGER SHALL BE SECTIONAL TYPE, FABRICATED OF HEAVY GAUGE ALUMINIZED STEEL. VENTING SHALL BE DIRECT OUTDOORS. BURNERS SHALL BE MULTI-PORT, IN-SHOT TYPE CONSTRUCTED OF ALUMINIZED STEEL. GAS MAIN AND UNIT SHALL BE AGA APPROVED WITH REDUNDANT VALVE. FURNACE PILOT SHALL BE ELECTRONIC IGNITION. HEAT EXCHANGER SECTION SHALL BE INSULATED WITH FOIL FACE INSULATION.

D. EVAPORATOR COIL SHALL CONSIST OF CONFIGURED ALUMINUM FIN SURFACE MECHANICALLY BONDED TO 3/8 INCH INTERNALLY ENHANCED COPPER TUBING. COIL SHALL BE FACTORY PRESSURE AND LEAK TESTED AT 375 PSIG. COIL SHALL BE ARRANGED FOR BLOW-THROUGH AIRFLOW AND PROVIDED WITH CONDENSATE DRAIN PAN CONSTRUCTED OF PVC PLASTIC. EXTERNAL CONNECTIONS SHALL BE PROVIDED ON EITHER SIDE OF THE UNIT.

E. EVAPORATOR FAN SHALL BE FORWARD CURVED, CENTRIFUGAL-TYPE FAN(S) WITH ADJUSTABLE SPEED DIRECT DRIVE MOTOR. THERMAL OVERLOAD PROTECTION SHALL BE STANDARD ON MOTOR. FAN AND MOTOR BEARINGS SHALL BE PERMANENTLY LUBRICATED.

F. MAGNETIC EVAPORATOR FAN CONTACTOR, LOW VOLTAGE TERMINAL STRIP, CHECK VALVE(S), AND SINGLE POINT POWER ENTRY SHALL BE INCLUDED. ALL NECESSARY CONTROLS SHALL BE FACTOR-INSULATED AND WIRED. EVAPORATOR DEFROST CONTROL SHALL BE INCLUDED TO PREVENT COMPRESSOR SLUGGING BY TEMPORARILY INTERRUPTING COMPRESSOR OPERATION WHEN LOW EVAPORATOR COIL TEMPERATURES ARE ENCOUNTERED.

G. INSTALL UNIT IN ACCORDANCE WITH MANUFACTURER'S INSTRUCTIONS. INSTALL CONDENSATE DRAIN PIPING FROM UNIT TO DRAIN AS INDICATED ON THE DRAWINGS. PROVIDE UNIT WITH NECESSARY VENT PIPING AND CONCENTRIC INTAKE/EXHAUST ACCESSORIES.

H. GAS FIRED FURNACES SHALL BE CARRIER MODEL MXA OR APPROVED EQUAL.

SECTION 15630 – GAS FIRED RADIANT HEATERS

A. HIGH-INTENSITY INFRARED HEATER (GAS-FIRED)
1. GAS-FIRED HIGH-INTENSITY INFRARED HEATERS SHALL COMPLY WITH ANSI Z83.19, SECTION 2.10 RADIANT COEFFICIENT, WITHOUT THE USE OF A SECONDARY RE-RADIATING SURFACE OF EITHER RODS OR SCREEN. THE CERAMIC RADIANT SURFACE SHALL BE HORIZONTAL WHEN HEATER IS INSTALLED AT 0 DEGREES. HEATERS SHALL BE CAPABLE OF ANGLE MOUNTING FROM 5 TO 30 DEGREES,
2. WITHOUT THE USE OF AN ADDITIONAL REFLECTOR. HEATERS SHALL BE FULLY TESTED AND READY TO INSTALL, PIPE AND WIRE FOR OPERATION ON NATURAL OR LP/PROPANE GAS. HEATERS SHALL BE DESIGNED TO SATISFACTORILY OPERATE AT A MINIMUM SUPPLY
3. INLET GAS PRESSURE OF 7 INCHES WATER COLUMN (W.C.) WHEN SPECIFIED FOR NATURAL GAS OR 11 INCHES W.C. WHEN SPECIFIED FOR LP/PROPANE GAS AND AT A MAXIMUM SUPPLY INLET GAS PRESSURE OF 14 INCHES W.C.F. HEATERS SHALL BE DESIGNED TO OPERATE WITHOUT ADJUSTMENTS WHEN BURNING NATURAL GAS HAVING A HEAT VALUE OF 1000 BTU PER CUBIC FOOT WITH A SPECIFIC GRAVITY OF .65,
4. HEATERS SHALL BE EQUIPPED WITH ONE OF THE FOLLOWING CONTROLS: 1. SINGLE-STAGE, 120 VAC DIRECT SPARK IGNITION CONTROL HAVING: 100% SAFETY SHUT OFF WITH FLAME MONITORING AND 10.8 VA MAXIMUM POWER CONSUMPTION. CONTROL SHALL OPERATE WITH NO EXTERNAL ELECTRICAL POWER, BUT INSTEAD USE MILLI-VOLTAGE GENERATED BY THE PILOT FLAME. THE HEATER'S CONTROLS SHALL BE EASILY ACCESSIBLE.THE DIRECT SPARK IGNITOR OR MANUAL PILOT SHALL BE DURABLE TO RESIST BREAKAGE. THE HEATER IS FITTED WITH A GAS ORIFICE FOR EACH BURNER FOR PROPER AIR TO GAS MIXTURE FOR SEA LEVEL. HEATERS CAN BE ORDERED OR CONVERTED FOR USE AT HIGH ALTITUDES, OR WITH EITHER LP/PROPANE OR NATURAL GAS.
5. CONSTRUCTION: THE HEATER SHALL BE OF MODULAR DESIGN EMPLOYING MULTIPLE BURNERS TO ACHIEVE THE SPECIFIED INPUT. THE BURNER(S) SHALL INCLUDE A CERAMIC COMBUSTION SURFACE, A PLENUM CHAMBER AND A VENTURI MIXER AND SHALL BE REMOVABLE WITH A SINGLE SCREWFOR CLEANING OR REPLACEMENT WITHOUT DISCONNECTING ANY GAS, ELECTRICAL OR HANGING DEVICE. THE CERAMIC COMBUSTION SURFACE SHALL BE CAPABLE OF REACHING TEMPERATURES UP TO 1850 DEGREES F (AN INCANDESCENT APPEARANCE) AND WITHSTAND THERMAL SHOCK WHEN WATER QUENCHED. THE COMBUSTION SURFACE SHALL BE A CORDIERITE-BASED GROOVED CERAMIC OF AN EXCLUSIVE PERMEABLE DESIGN WHEREBY ALTERNATE ROWS OF 230 PERFORATIONS PER SQUARE INCH TERMINATE AT THE BOTTOM OF SLOTS MAKING ONE HALF OF THE FLAME BELOW THE TOP SURFACE OF THE CERAMIC AND CREATING A MORE INTIMATE CONTACT BETWEEN FLAME AND SURFACE. THE BURNER'S PLENUM CHAMBER SHALL BE OF 20 GA. (.035") CORROSION-FREE ALUMINIZED STEEL, ONE-PIECE FABRICATION AND SEAMLESS NO-WELD CONSTRUCTION. THE PLENUM CHAMBER SHALL UTILIZE A ONE-PIECE STAINLESS STEEL RETAINER TO HOLD THE CERAMIC SURFACE IN PLACE AROUND ITS ENTIRE PERIMETER AND A 14 GA. (.083") ALUMINIZED STEEL BACK BRACKET FOR HOLDING THE BURNER ASSEMBLY IN PLACE TO ACHIEVE PROPER ALIGNMENT OF THE SURFACE, VENTURI AND ORIFICE. THE VENTURI SHALL BE MADE OF ALUMINIZED STEEL. F. THE HEATER'S MAIN FRAME SHALL BE 16 GA. (.065") CORROSION-FREE ALUMINIZED STEEL AND OF NO-WELD CONSTRUCTION. THE MAIN FRAME SHALL HAVE A DOUBLE TURNED UPPER EDGE AND TWO (2) CORNER REINFORCEMENT BRACKETS FOR RIGIDITY. THE SIDE FRAMES SHALL HAVE FOUR (4) 3/8" DIAMETER HOLES FOR EASY MOUNTING WITH S-HOOKS AND CHAIN. REFLECTORS SHALL BE OF 21 GA. (.032") HIGHLY POLISHED MIRROR BRITE ALUMINUM WITH A REFLECTIVITY OF NOT LESS THAN 98%. STANDARD REFLECTOR DESIGN (SHAPE) SHALL HAVE .352 SQUARE FEET OF REFLECTIVE AREA PER LINEAR FOOT, WITH A DOUBLE TURNED EDGE FOR RIGIDITY AND BE MOUNTED TO THE HEATER AT THE FACTORY.
6. UNITS SHALL BE DETROIT RADIANT/REVERBERRAY,
B. TUBULAR INFRARED HEATERS
1. AVAILABLE MANUFACTURERS: SUBJECT TO COMPLIANCE WITH REQUIREMENTS, MANUFACTURERS OFFERING PRODUCTS THAT MAY BE INCORPORATED INTO THE WORK INCLUDE, BUT ARE NOT LIMITED TO, THE FOLLOWING:
2. DESCRIPTION: FACTORY ASSEMBLED, PIPED, AND WIRED, AND COMPLYING WITH ANSI Z83.20/CSA 2.34.
3. FUEL TYPE: DESIGN BURNER FOR NATURAL GAS HAVING CHARACTERISTICS SAME AS THOSE OF GAS AVAILABLE AT PROJECT SITE.
4. COMBUSTION TUBING: 4-INCH- DIAMETER ALUMINIZED STEEL WITH HIGH-EMISSIVITY, HIGH-TEMPERATURE, CORROSION-RESISTANT EXTERNAL FINISH.
5. TUBING CONNECTIONS: STAINLESS-STEEL COUPLINGS OR FLARED JOINTS WITH STAINLESS-STEEL DRAW BOLTS.
6. REFLECTOR: POLISHED ALUMINUM, 97 PERCENT MINIMUM REFLECTIVITY, WITH END CAPS. SHAPE TO CONTROL RADIATION FROM TUBING FOR UNIFORM INTENSITY AT FLOOR LEVEL WITH 100 PERCENT CUTOFF ABOVE CENTERLINE OF TUBING. PROVIDE FOR ROTATING REFLECTOR OR HEATER AROUND A HORIZONTAL AXIS FOR MINIMUM 30-DEGREE TILT FROM VERTICAL.
7. REFLECTOR EXTENSION SHIELDS: SAME MATERIAL AS REFLECTORS, ARRANGED FOR FIXED CONNECTION TO LOWER REFLECTOR LIP AND RIGID SUPPORT TO PROVIDE 100 PERCENT CUTOFF OF DIRECT RADIATION FROM TUBING AT ANGLES GREATER THAN 30 FROM VERTICAL.
8. INCLUDE HANGER KIT AND BURNER SAFETY CONTROLS:
9. GAS CONTROL VALVE: SINGLE-STAGE, REGULATED REDUNDANT 24-V AC GAS VALVE CONTAINING PILOT SOLENOID VALVE, ELECTRIC GAS VALVE, PILOT FILTER, PRESSURE REGULATOR, PILOT SHUTOFF, AND MANUAL SHUTOFF ALL IN ONE BODY. BLOCKED VENT SAFETY: DIFFERENTIAL PRESSURE SWITCH IN BURNER SAFETY CIRCUIT TO STOP BURNER OPERATION WITH HIGH DISCHARGE OR SUCTION PRESSURE.
10. CONTROL PANEL INTERLOCK: STOPS BURNER IF PANEL IS OPEN. INDICATOR LIGHTS: BURNER-ON INDICATOR LIGHT.
11. BURNER AND EMITTER TYPE: GRAVITY-VENTED POWER BURNER, WITH THE FOLLOWING FEATURES:
12. EMITTER TUBE: 4-INCH- DIAMETER, ALUMINIZED STEEL TUBING WITH SIGHT GLASS FOR BURNER AND PILOT FLAME OBSERVATION.
13. VENTING: CONNECTOR AT EXIT END OF EMITTER TUBING FOR VENT-PIPE CONNECTION. VENT TERMINAL: HORIZONTAL.
14. BURNER/IGNITION: POWER GAS BURNER WITH ELECTRONIC SPARK AND ELECTRONIC FLAME SAFETY. COMBUSTION-AIR CONNECTION: DUCT CONNECTION FOR COMBUSTION AIR TO BE DRAWN DIRECTLY FROM OUTDOORS BY BURNER FAN.

SECTION 15671 - AIR COOLED CONDENSING UNITS

A. UNITS SHALL BE ASSEMBLED ON MINIMUM 10 GAUGE STEEL MOUNTING/LIFTING RAILS AND SHALL BE WEATHER PROOFED. UNIT SHALL INCLUDE HERMETIC OR SEMI-HERMETIC RECIPROCATING COMPRESSOR(S), PLATE FIN CONDENSER COIL, FANS AND MOTORS, CONTROLS AND HOLDING CHARGE OF R-22. UNITS SHALL BE UL LISTED, AND RATED IN ACCORDANCE WITH ARI STANDARD 240 AND 270.
B. UNIT CASING SHALL BE CONSTRUCTED OF MINIMUM 18 GAUGE G-210, HEAVY GALVANIZED STEEL. EXTERIOR SURFACES SHALL BE FINISHED WITH A WEATHER-RESISTANT BAKED ENAMEL FINISH. COATING SYSTEM SHALL HAVE BEEN TESTED 500 HOURS IN SALT SPRAY TEST (ASTM B117). UNITS SHALL HAVE REMOVABLE PANELS THAT ALLOW ACCESS TO ALL MAJOR COMPONENTS AND CONTROLS.
C. SINGLE COMPRESSOR UNITS LESS THAN 7-1/2 TONS:
1. COMPRESSOR SHALL BE HERMETICALLY SEALED AND MOUNTED ON RUBBER VIBRATION ISOLATORS. COMPRESSOR SHALL INCLUDE INTERNAL OVER TEMPERATURE AND PRESSURE PROTECTION, THERMOSTATICALLY CONTROLLED SUMP HEATER, AND INTERNAL SPRING MOUNTS. REFRIGERATION CIRCUIT SHALL INCLUDE FACTORY INSTALLED LIQUID LINE DRIER, LOW PRESSURE SWITCH. LIQUID LINE AND SUCTION LINE SERVICE VALVE WITH GAUGE PORT.
D. CONDENSER SHALL BE INTERNALLY FINNED OR SMOOTH BORE 3/8 INCH COPPER TUBES MECHANICALLY BONDED TO CONFIGURED ALUMINUM PLATE FIN AS STANDARD. COIL SHALL BE FACTORY PRESSURE AND LEAK TESTED TO 375 PSIG AIR PRESSURE. PROVIDE CONDENSER COIL GUARD CONSISTING OF METAL GRILLE WITH PVC COATING.
E. CONDENSER FAN AND MOTOR(S) SHALL HAVE DIRECT-DRIVE, STATICALLY AND DYNAMICALLY BALANCED FAN(S) WITH ALUMINUM BLADES AND ELECTRO-COATED STEEL HUBS. FANS SHALL BE MOUNTED IN DRAW-THROUGH VERTICAL DISCHARGE POSITION. PERMANENTLY LUBRICATED TOTALLY ENCLOSED TYPE MOTORS SHALL BE PROVIDED AND SHALL HAVE BUILT IN CURRENT AND THERMAL OVERLOAD PROTECTION. MOTOR(S) SHALL BE BALL BEARING TYPE.
F. UNITS SHALL BE COMPLETELY FACTORY WIRED WITH NECESSARY CONTROLS AND CONTACTOR WITH PRESSURE LUGS OR TERMINAL BLOCK FOR POWER WIRING. CONTROL WIRING SHALL BE 24-VOLT CONTROL CIRCUIT WHICH INCLUDES FUSING AND CONTROL TRANSFORMER.
G. DEFROST CONTROLS SHALL INCLUDE ELECTRONIC TIME INITIATED, TEMPERATURE TERMINATED DEFROST SYSTEM. TIMED OVERRIDE LIMITS DEFROST CYCLE TO 10 MINUTES.
H. LOW AMBIENT HEAD PRESSURE SHALL BE PROVIDED TO MODULATE THE RPM OF UNIT OUTDOOR FAN MOTOR IN RESPONSE TO OUTDOOR AMBIENT TEMPERATURES AND UNIT HEAD PRESSURE. PROVIDE UNIT COOLING OPERATION TO OUTDOOR TEMPERATURE 0 DEGREES F.
I. PROVIDE ANTI-SHORT-CYCLE TIMER TO PREVENT RAPID ON-OFF COMPRESSOR CYCLING IN LIGHT LOAD CONDITIONS BY NOT ALLOWING COMPRESSOR TO OPERATE FOR 5-7 MINUTES UPON SHUTDOWN. TIMER SHALL CONSIST OF A SOLID STATE TIMING DEVICE, 24-VOLT, 60 CYCLE.
J. WARRANTY:
1. PROVIDE A WRITTEN WARRANTY AGREEING TO REPLACE COMPONENTS THAT FAIL IN MATERIALS AND WORKMANSHIP WITHIN THE SPECIFIED WARRANTY PERIOD, PROVIDED MANUFACTURER'S WRITTEN INSTRUCTIONS FOR INSTALLATION, OPERATION, AND MAINTENANCE HAVE BEEN FOLLOWED.
2. WARRANTY PERIOD: MANUFACTURERS STANDARD, BUT NOT LESS THAN FIVE (5) YEARS FROM DATE OF SUBSTANTIAL COMPLETION FOR COMPRESSOR(S) AND ONE (1) YEAR FOR ALL OTHER COMPONENTS.
K. UNITS SHALL BE JCI, CARRIER OR APPROVED EQUAL. INSTALL UNIT IN ACCORDANCE WITH MANUFACTURER=S INSTRUCTIONS.

SECTION 15855 - SPLIT SYSTEM DX AIR HANDLING UNITS

A. AIR HANDLING UNITS SHALL BE COMPLETELY FACTORY ASSEMBLED INCLUDING COIL, CONDENSATE DRAIN PAN, FAN MOTOR(S), FILTERS AND CONTROLS IN AN INSULATED CASING THAT CAN BE APPLIED IN EITHER VERTICAL OR HORIZONTAL CONFIGURATION. UNITS SHALL BE RATED AND TESTED IN ACCORDANCE WITH ARI STANDARD. UNITS SHALL BE UL LISTED AND LABELED IN ACCORDANCE WITH UL 465 AND UL 1995 FOR INDOOR BLOWER COIL UNITS.
B. UNIT CASING SHALL BE CONSTRUCTED OF ZINC COATED, MINIMUM 20 GAUGE, G-90 GALVANIZED STEEL. CASING SHALL BE COMPLETELY INSULATED WITH FIRE-RETARDANT, PERMANENT, ODORLESS GLASS FIBER MATERIAL WITH R-VALVE NOT LESS THAN 4. KNOCKOUTS SHALL BE PROVIDED FOR UNIT ELECTRIC POWER AND REFRIGERANT PIPING CONNECTIONS. CAPTIVE SCREWS SHALL BE STANDARD ON ALL ACCESS PANELS.
C. DIRECT EXPANSION COIL SHALL BE ALUMINUM FIN SURFACE MECHANICALLY BONDED TO 3/8 INCH INTERNALLY ENHANCED COPPER TUBING AND FACTORY PRESSURE AND LEAK TESTED AT 375 PSIG.
D. CONDENSATE DRAIN PAN SHALL BE ONE-PIECE, CORROSION RESISTANT, AND FULLY DRAINABLE. COIL SHALL BE MOUNTED ABOVE, NOT IN, THE DRAIN PAN TO ALLOW FULL INSPECTION OR CLEANING OF DRAIN PAN. UNIT SHALL CONTAIN CONDENSATE DRAIN PANS FOR BOTH HORIZONTAL AND VERTICAL APPLICATIONS. DRAIN PANS SHALL HAVE CONNECTIONS ON BOTH SIDES OF THE UNIT. INSTALL FULL SIZE CONDENSATE DRAIN PIPING FROM UNIT TO LOCATION INDICATED ON PLAN. DRAIN LINE SHALL BE INSTALLED WITH A SLOPE OF NOT LESS THAN 1/8 INCH PER FOOT DOWN IN THE DIRECTION OF FLOW.
E. BLOWER FAN SHALL BE DOUBLE INLET, DOUBLE WIDTH, FORWARD CURVED, CENTRIFUGAL-TYPE FAN(S) WITH ADJUSTABLE BELT DRIVE UNLESS NOTED OTHERWISE. THERMAL OVERLOAD PROTECTION SHALL BE STANDARD ON MOTOR. FAN AND MOTOR BEARINGS SHALL BE PERMANENTLY LUBRICATED.
F. MAGNETIC MOTOR STARTER, LOW VOLTAGE TERMINAL STRIP, AND SINGLE POINT POWER ENTRY SHALL BE INCLUDED. ALL NECESSARY CONTROLS SHALL BE FACTORY-INSULATED AND WIRED. EVAPORATOR DEFROST CONTROL SHALL BE INCLUDED TO PREVENT COMPRESSOR SLUGGING BY TEMPORARILY INTERRUPTING COMPRESSOR OPERATION WHEN LOW EVAPORATOR COIL TEMPERATURES ARE ENCOUNTERED.
G. FILTERS SHALL BE ONEINCH, THROW-AWAY TYPE FILTERS FILTERS SHALL BE ACCESSIBLE FROM EITHER SIDE THROUGH THE COIL ACCESS PANEL.

H. PROVIDE UNIT MOUNTED ELECTRIC HEATERS AS SCHEDULED. ELECTRIC HEAT ASSEMBLY SHALL BE UL, ETL, AND CSA APPROVED FOR DIRECT INSTALLATION ON FAN DISCHARGE. HEATER ASSEMBLY SHALL HAVE SINGLE-POINT POWER WIRING AND INCLUDE CONTACTORS WITH 24 VOLT COILS, POWER WIRING, 24 VOLT CONTROL WIRING TERMINAL BLOCKS, AND A HINGED ACCESS PANEL. ELECTRIC HEATER ELEMENTS SHALL BE CONSTRUCTED OF HEAVY-DUTY NICKEL CHROMIUM ELEMENTS.
I. UNITS SHALL BE YORK, CARRIER OR APPROVED EQUAL. INSTALL UNIT IN ACCORDANCE WITH MANUFACTURER=S INSTRUCTIONS.

Pinnacle ENGINEERING, INC
Engineering & Design Consultants
2111 Parkway Office Circle, Suite 125
Birmingham, AL 35244
(205) 733-6912 FAX: (205) 733-6913
Job No.24207

AHO ARCHITECTS
a sole proprietorship
www.ahoarch.com

STATE OF KENTUCKY
JEFFREY BOYER
40070
REGISTERED PROFESSIONAL ENGINEER
10/4/24

Express Oil Change & Tire Engineers
Single Building / Right Hand Oil Change / Front Enter / Side Tire Storage
Morehead, Kentucky

FINAL

No.	Description	Date

© 2024 Aho Architects, LLC. All Rights Reserved.

Mechanical Specifications

Project number	24029
Date	10/04/2024
Drawn by	CA
Checked by	JB

M0.02

Scale	12" = 1'-0"

10/7/2024 10:32:36 AM

SECTION 15870 - POWER VENTILATORS

A. POWER VENTILATORS WHICH ARE SCHEDULED OR REFERRED TO BY MODEL NUMBER OR CATALOGUE NUMBER ARE INTENDED TO INCLUDE ALL MATERIALS COVERED BY SUCH NUMBER. ANY REQUIRED ACCESSORIES FOR THE INSTALLATION OF THE FAN ARE TO BE BY THE SAME MANUFACTURER UNLESS OTHERWISE NOTED.

B. ALL WIRING AND ELECTRICAL COMPONENTS SHALL COMPLY WITH THE NATIONAL ELECTRIC CODES (NEC). ALL MATERIALS SHALL BE UL LISTED. FANS SHALL BE UL 705. FANS SHALL BEAR THE AMCA CERTIFIED RATINGS SEAL FOR SOUND AND AIR PERFORMANCE. FAN ASSEMBLY SHALL BEAR AN ENGRAVED ALUMINUM NAMEPLATE. FANS WHEELS SHALL BE BALANCED IN ACCORDANCE WITH AMCA STANDARD 204-96.

C. EACH UNIT SHALL HAVE A BIRDSCREEN CONSTRUCTED OF GALVANIZED WIRE MESH WITH 2 IN. OPENINGS MOUNTED VERTICALLY IN THE UNIT DISCHARGE. THE BIRDSCREEN SHALL PRODUCE MINIMAL EFFECT ON AIR AND SOUND PERFORMANCE.

D. INSTALL FAN IN ACCORDANCE WITH MANUFACTURER'S INSTALLATION INSTRUCTIONS. INSTALL FANS WITH CLEARANCES FOR SERVICE AND MAINTENANCE. MAKE FINAL DUCT CONNECTIONS TO FANS WITH FLEXIBLE CONNECTORS.

E. ROOF CURBS SHALL BE CONSTRUCTED USING MINIMUM 14 GAUGE GALVANIZED STEEL WITH FULLY MITERED AND WELDED CORNERS, INTEGRAL BASE PLATES INTERNALLY REINFORCED WITH 1 IN. X L IN. X 1/8 IN. STEEL ANGLE, FACTORY INSULATED WITH L. 1/2 IN. THICK THREE POUND PER CU. FT. DENSITY FIBERGLASS INSULATION. CURBS SHALL BE FABRICATED WITHOUT CANTS. MINIMUM HEIGHT OF CURB SHALL BE 8 IN. ABOVE FINISHED ROOF. CURBS SHALL BE CONSTRUCTED TO MATCH SLOPE OF ROOF AND PROVIDE A LEVEL TOP SURFACE FOR MOUNTING OF MECHANICAL EQUIPMENT.

F. BACK DRAFT DAMPER SHALL BE 6063T5 EXTRUDED ALUMINUM FRAME, .025 IN THICK FORMED ALUMINUM BLADES, EXTRUDED VINYL EDGE SEALS, SYNTHETIC BEARINGS, MILL FINISH.

G. DOWNBLAST CENTRIFUGAL ROOF EXHAUSTER - BELT DRIVE:

1. FAN SHALL BE SPUN ALUMINUM OF BOLTED AND WELDED CONSTRUCTION UTILIZING CORROSION RESISTANT FASTENERS. THE SPUN ALUMINUM STRUCTURAL COMPONENTS SHALL BE CONSTRUCTED OF MINIMUM 16 GAUGE MARINE ALLOY ALUMINUM, BOLTED TO A RIGID ALUMINUM SUPPORT STRUCTURE. THE ALUMINUM BASE SHALL HAVE CONTINUOUSLY WELDED CURB CAP CORNERS FOR MAXIMUM LEAK PROTECTION. THE DISCHARGE BAFFLE SHALL HAVE A ROLLED BEAD.
2. AN INTEGRAL CONDUIT CHASE SHALL BE PROVIDED THROUGH THE CURB CAP AND INTO THE MOTOR COMPARTMENT TO FACILITATE WIRING CONNECTIONS.
3. FAN WHEEL SHALL BE CENTRIFUGAL BACKWARD INCLINED, CONSTRUCTED OF 100% ALUMINUM, INCLUDING A PRECISION MACHINED CAST ALUMINUM HUB. WHEEL INLET SHALL OVERLAP AN AERODYNAMIC ALUMINUM INLET CONE. MOTOR SHALL BE HEAVY DUTY TYPE WITH PERMANENTLY LUBRICATED SEALED BALL BEARINGS AND FURNISHED AT THE SPECIFIED VOLTAGE, PHASE AND ENCLOSURE.
4. BEARINGS SHALL BE DESIGNED AND INDIVIDUALLY TESTED SPECIFICALLY FOR USE IN AIR HANDLING APPLICATIONS. CONSTRUCTION SHALL BE HEAVY DUTY REGREASABLE BALL TYPE IN A CAST IRON HOUSING SELECTED FOR A MINIMUM L50 LIFE IN EXCESS OF 200,000 HOURS AT MAXIMUM CATALOGED OPERATING SPEED.
5. BEARINGS AND DRIVES SHALL BE MOUNTED ON A MINIMUM 14 GAUGE STEEL ASSEMBLY, ISOLATED FROM THE UNIT STRUCTURE WITH RUBBER VIBRATION ISOLATORS. THESE COMPONENTS SHALL BE ENCLOSED IN A WEATHER TIGHT COMPARTMENT, SEPARATED FROM THE EXHAUST AIRSTREAM. DRIVES SHALL BE PRECISION MACHINED CAST IRON TYPE, KEYED AND SECURELY ATTACHED TO THE WHEEL AND MOTOR SHAFTS. DRIVES SHALL BE SIZED FOR 150% OF THE INSTALLED MOTOR HORSEPOWER. BELTS SHALL BE OIL AND HEAT RESISTANT, NON-STATIC TYPE.
6. FAN SHALL BE MODEL ACE-B AS MANUFACTURED BY LOREN COOK COMPANY. GREENHECK, ACME AND PENN VENTILATOR ARE APPROVED EQUAL.

H. SQUARE INLINE EXHAUSTER - DIRECT DRIVE:

1. THE FAN SHALL BE OF BOLTED AND WELDED CONSTRUCTION UTILIZING CORROSION RESISTANT FASTENERS. HOUSING SHALL BE MINIMUM 18 GAUGE STEEL WITH AIRFLOW STRAIGHTENING VANES, INTEGRAL DUCT FLANGES AND HINGED ACCESS DOOR.
2. FAN WHEEL SHALL BE CENTRIFUGAL BACKWARD INCLINED, CONSTRUCTED OF 100% ALUMINUM, INCLUDING A PRECISION MACHINED CAST ALUMINUM HUB. WHEEL INLET SHALL OVERLAP AN AERODYNAMIC ALUMINUM INLET CONE.
3. MOTOR SHALL BE HEAVY DUTY TYPE WITH PERMANENTLY LUBRICATED SEALED BALL BEARINGS AND FURNISHED AT THE SPECIFIED VOLTAGE, PHASE AND ENCLOSURE.
4. FAN SHALL BE MODEL SQI-D AS MANUFACTURED BY LOREN COOK COMPANY. GREENHECK, ACME AND PENN VENTILATOR ARE APPROVED EQUAL.

I. CEILING MOUNTED EXHAUST FAN - DIRECT DRIVE:

1. GC 100 SERIES: THE FAN WHEEL HOUSING AND INTEGRAL OUTLET DUCT SHALL BE INJECTION MOLDED FROM A SPECIALLY ENGINEERED RESIN EXCEEDING UL REQUIREMENTS FOR SMOKE AND HEAT GENERATION. THE OUTLET DUCT SHALL HAVE PROVISION FOR AN ALUMINUM BACKDRAFT DAMPER WITH CONTINUOUS ALUMINUM HINGE ROD. THE INLET BOX SHALL BE MINIMUM 22 GAUGE GALVANIZED STEEL. MOTOR SHALL BE ISOLATION MOUNTED TO A ONE PIECE GALVANIZED STAMPED STEEL INTEGRAL MOTOR MOUNT/INLET. A FIELD WIRING COMPARTMENT WITH RECEPTACLE SHALL BE STANDARD. TO ACCOMMODATE DIFFERENT CEILING THICKNESS, AN ADJUSTABLE PREPUNCHED MOUNTING BRACKET SHALL BE PROVIDED. A WHITE, NON-YELLOWING, HIGH IMPACT STYRENE INJECTION MOLDED GRILL SHALL BE PROVIDED AS STANDARD. WHEEL SHALL BE CENTRIFUGAL FORWARD CURVED TYPE, INJECTION MOLDED OF POLYPROPYLENE RESIN.
2. MOTOR SHALL BE OPEN DRIP PROOF TYPE WITH PERMANENTLY LUBRICATED SEALED BEARINGS AND INCLUDE IMPEDANCE OR THERMAL OVERLOAD PROTECTION AND DISCONNECT PLUG. MOTOR SHALL BE FURNISHED AT THE SPECIFIED VOLTAGE.
3. FAN SHALL BE MODEL GC AS MANUFACTURED BY LOREN COOK COMPANY. GREENHECK, ACME AND PENN VENTILATOR ARE APPROVED EQUAL.

SECTION 15892 - LOW PRESSURE DUCTWORK

A. GENERAL
1. DUCT SYSTEM SHALL BE FABRICATED WITH SHEET METAL THICKNESSES AND REINFORCED IN ACCORDANCE WITH SMACNA, AS SHOWN ON THE DRAWINGS AND AS DESCRIBED HEREIN. DUCTS 18 INCHES AND LARGER ON ANY SIDE SHALL BE STIFFENED BY BEADING ON NOT TO EXCEED 12 INCH CENTERS. UNLESS NOTED OTHERWISE THE MINIMUM PRESSURE/VELOCITY CLASSIFICATION SHALL BE 2 INCH W.G. PLUS OR MINUS, AT 2500 FT. PER MINUTE, DUCT SEAL CLASS "A". DUCT SIZES SHOWN ARE CLEAR INSIDE DIMENSIONS.
2. DUCTWORK HANGERS SHALL BE SUPPORTED BY FASTENERS ATTACHED TO STRUCTURAL STEEL. REPAIR FIRE PROOFING WHICH WAS REMOVED FOR DUCTWORK INSTALLATION. INSTALLATION TO BE DONE BY AN APPROVED QUALIFIED TRADESMAN.
3. INSTALL IN THE DUCTWORK DEVICES FURNISHED BY THE TEMPERATURE CONTROLS SUB-CONTRACTOR. INSTALL SMOKE DETECTORS IN DUCTWORK FURNISHED BY THE DIVISION 16 CONTRACTOR.
4. WATER AND OTHER PIPES SHALL NOT BE ALLOWED TO PASS THROUGH AIR RISERS OR DUCTS, UNLESS APPROVED BY THE ENGINEERS, AND WHEN THIS OCCURS, THE SIZE OF SAID DUCT OR RISER SHALL BE PROPORTIONATELY INCREASED. SANITARY WASTE AND VENT PIPING SHALL NOT PENETRATE ANY DUCTWORK.

B. GALVANIZED STEEL DUCTWORK:
1. GALVANIZED STEEL DUCTWORK SHALL CONFORM TO ASTM A653 (G60). ALL LONGITUDINAL SEAMS SHALL BE GROOVED, DOUBLE OR PITTSBURGH TYPE.

C. DUCTWORK FITTINGS:
1. FOR RECTANGULAR DUCTWORK, VANES SHALL BE PROVIDED IN ELBOWS WITH 90 DEGREE THROATS AND THROAT RADII LESS THAN 1-1/2 TIMES DUCT WIDTH. VANES SHALL BE LOCATED IN ACCORDANCE WITH ASHRAE STANDARDS. DOUBLE-VANE AIRFOIL-TYPE TURNING VANES SHALL BE PROVIDED FOR ALL SQUARE TURNS.

D. HANGERS AND SUPPORTS:
1. PROVIDE CONCRETE INSERTS OR STRUCTURAL STEEL FASTENERS APPROPRIATE FOR BUILDING MATERIALS. PROVIDE TRAPEZE AND RISER SUPPORTS AS REQUIRED. SUPPORT MATERIALS SHALL BE THE SAME AS DUCTWORK SUPPORTING.
2. HANGER, STRAPS AND RODS SHALL WITH SMACNA'S "HVAC DUCT CONSTRUCTION STANDARDS METAL AND FLEXIBLE" STANDARDS
3. DUCT ATTACHMENTS: SHEET METAL SCREWS, BLIND RIVETS OR SELF-TAPPING METAL SCREWS; COMPATIBLE WITH DUCT MATERIALS.

E. SEALANT MATERIAL:
1. SEALANTS SHALL BE SOLVENT OR WATER BASED TYPE U.L. CLASSIFIED MEETING NFPA 90A CLASS 1 WITH ZERO FIRE AND SMOKE DEVELOPMENT RATING. SEALER SHALL BE UNITED SHEET METAL, UNITED DUCT SEALER, OR HARDCAST DUCT GRIP NO. 601. TRANSVERSE SEAMS SHALL BE TAPED AND SEALED WITH TWO LAYERS OF UNITED SHEET METAL, UNI-CAST OR CAULKED WITH DUCT SEALER.

F. FLEXIBLE CONNECTORS:
1. INSTALL FLEXIBLE CONNECTORS AT ALL SUPPLY AND EXHAUST FANS AND OTHER AIR HANDLING UNITS WITH INLET AND OUTLET DUCT OR CASING CONNECTIONS. CONNECTORS SHALL NOT BE PAINTED. CONNECTORS SHALL NOT BE USED AS TRANSITION PIECES BETWEEN FAN AND DUCTWORK.
2. CONNECTORS SHALL BE NOT LESS THAN 4 INCHES LONG (IN CLEAR) AND PROPERLY ATTACHED TO DUCT AND FAN CONNECTION COLLAR BY 1 X 1/8 INCH DRAW BAND (FABRICATED OF THE SAME MATERIAL AS ADJACENT DUCTWORK) FIRMLY CLAMPED AROUND COLLARS IN SUCH A MANNER AS TO BE AIRTIGHT AND SECURED TO COLLARS WITH SHEET METAL SCREWS.
3. FLEXIBLE CONNECTORS SHALL BE U.L. LISTED, NEOPRENE COATED HEAVY GLASS FABRIC. FABRIC SHALL BE VENTGLAS, MANUFACTURED BY VENTFABRICS, INC.

G. FLEXIBLE DUCTWORK:
1. FLEXIBLE DUCTS SHALL BE USED FOR STRAIGHT RUNS OF DUCT OR OFFSETS UP TO 45 DEGREES, BUT NOT EXCEEDING 48 INCHES IN LENGTH. THE USE OF FLEXIBLE DUCTS AS ELBOWS WITH MORE THAN A 45 DEGREE BEND WILL NOT BE PERMITTED.
2. FLEXIBLE DUCT SHALL BE UL LISTED AND LABELED AS CLASS 1, AIR DUCT CONNECTOR, IN ACCORDANCE WITH U.L. STANDARD 181 AND SHALL MEET THE REQUIREMENTS OF THE LATEST NFPA BULLETIN, NO. 90A AND NO. 90B FOR FLAME SPREAD AND SMOKE DEVELOPMENT RATING.
3. FLEXIBLE DUCT SHALL BE RATED FOR A MAXIMUM PRESSURE OF 6 INCH POSITIVE AND 3/4 INCH NEGATIVE AND 4000 FPM MAXIMUM VELOCITY. AIR DUCT SHALL CONSIST OF: CPE LINER, COATED SPRING STEEL WIRE HELIX, FIBERGLASS INSULATING BLANKET, FIBERGLASS SCRIM AND REINFORCED ALUMINUM VAPOR BARRIER. THERMAL CONDUCTANCE SHALL BE .23 OR LESS.
4. DUCT SHALL BE FLEXMASTER TYPE 8M OR PRIOR APPROVED EQUAL.

A. VOLUME DAMPERS:
1. SINGLE BLADE DAMPERS SHALL BE CONSTRUCTED OF .22 GAUGE GALVANIZED STEEL (BLADE AND FRAME). SINGLE BLADE DAMPERS SHALL BE LIMITED TO A 12 INCH HIGH BLADE. BLADE EDGES SHALL BE CRIMPED OR REINFORCED. DAMPER LEVERS SHALL INDICATE POSITIVELY THE OPEN AND CLOSED POSITION. END BEARINGS SHALL BE MOLDED SYNTHETIC. DAMPERS SHALL BE RUSKIN MD25 OR APPROVED EQUAL (RUSKIN MDRS25 FOR ROUND DUCTS).
2. MULTIBLADE DAMPERS SHALL BE CONSTRUCTED OF SHEET METAL THE SAME MATERIAL AS THE ADJACENT DUCTWORK. DAMPER FRAME SHALL BE NOT LESS THAN 16 GA., DAMPER BLADES NOT WIDER THAN 6 INCHES CRIMPED OR REINFORCED. DAMPER LEVERS SHALL INDICATE POSITIVELY THE OPEN AND CLOSED POSITION. END BEARINGS SHALL BE MOLDED SYNTHETIC. DAMPER SHALL BE RUSKIN MD35 OR APPROVED EQUAL.

B. FIRE DAMPERS:
1. FIRE DAMPERS SHALL BE UNDERWRITERS APPROVED AND LABELED (UL555). DAMPERS SHALL BE FABRICATED OF GALVANIZED STEEL AND SHALL BE OF SUCH A DESIGN AND LENGTH AS TO FUNCTION AS A WALL MOUNTING SLEEVE, WHICH SHALL BE A PART OF THE FIRE DAMPER. SLEEVES SHALL BE OF WELDED OR BOLTED CONSTRUCTION. CRIMPING OR TABS WILL NOT BE ACCEPTABLE SUBSTITUTES FOR WELDING OR BOLTING.
2. FIRE DAMPERS SHALL BE RUSKIN DIDB2 SERIES FOR 1 2 HOUR RATING. FIRE DAMPERS SHALL BE RUSKIN DIDB23 SERIES FOR 3 HOUR RATING. INSTALL STYLE A FIRE DAMPERS BEHIND DUCTED GRILLES AND REGISTERS IN RATED WALLS. INSTALL STYLE B OR C FIRE DAMPERS IN DUCTED OPENINGS IN RATED WALLS. AIR BALANCE AND PREFCO ARE APPROVED EQUAL.

C. DAMPER HARDWARE:
1. ALL HARDWARE SHALL BE SMACNA ACCEPTED. INSULATED DUCTWORK (CONCEALED) - VENTLOK 638 ELEVATED DIAL REGULATOR. INSULATED DUCTWORK (EXPOSED) - VENTLOK 644 - SELF LOCKING REGULATOR. UNINSULATED DUCTWORK - VENTLOK 555 OR 560 QUADRANTS.

D. DUCT ACCESS DOORS:
1. ACCESS DOORS SHALL BE HINGED, CONSTRUCTED OF THE SAME MATERIAL AS THE DUCTWORK. DOOR EDGES SHALL BE SEALED WITH 3/4 INCH WIDE X 1/8 INCH THICK NEOPRENE SPONGE GASKETING. DOOR HARDWARE SHALL BE VENTLOK #100 LATCHES. ACCESS DOORS ON INSULATED DUCTWORK SHALL BE DOUBLE WALL CONSTRUCTION WITH 1 INCH OF RIGID 3 PCF FIBERGLASS INSULATION.
2. PROVIDE DUCT ACCESS DOORS AT ALL DUCT MOUNTED DEVICES REQUIRING ADJUSTMENT OR RESETTING. ACCESS DOORS SHALL BE APPROXIMATELY 18 INCHES HIGH BY 24 INCHES WIDE. IN SMALLER DUCTWORK, THE HEIGHT SHALL BE REDUCED TO BE 2 INCHES LESS THAN THAT OF THE DUCTWORK.

SECTION 15906 - TEMPERATURE CONTROLS

A. GENERAL:
1. FURNISH AND INSTALL AN ELECTRIC SYSTEM OF AUTOMATIC TEMPERATURE CONTROL AS SPECIFIED HEREIN AND AS SHOWN ON THE CONTRACT DRAWINGS AS MANUFACTURED BY HONEYWELL, JOHNSON CONTROLS, INVENSYS, OR APPROVED EQUAL.
2. EXTRA COSTS INCURRED BY USE OF OTHER THAN BASE BID CONTROL SYSTEM, SUCH AS WIRING, CONTRACT DRAWINGS CHANGES, CHANGES IN DESIGN, ADDED SUPERVISION, ETC., SHALL BE THE RESPONSIBILITY OF THE TEMPERATURE CONTROL SUBCONTRACTOR (TCSC).
3. SYSTEM DOCUMENTATION SHALL INCLUDE THE FOLLOWING: MANUFACTURER'S DATA SHEETS OF ALL PRODUCTS (ORIGINAL COPIES), COMPLETE DESCRIPTION OF OPERATION OF ALL CONTROL LOOPS, INCLUDING RECOMMENDED SETPOINTS AND RANGES OF ADJUSTMENT; FULLY LABELED ELEMENTARY DIAGRAM (ELECTRICAL LADDER DIAGRAM), AND LISTS OF ALL PROPOSED DEVICES AND EQUIPMENT

B. MOTOR OPERATORS: MOTOR OPERATOR SHALL BE SPRING RETURN TYPE, WHICH RETURNS MOTOR ACTUATOR SHAFT TO ITS FULL NORMAL MECHANICAL TRAVEL UPON POWER FAILURE. DAMPER MOTOR DRIVE MECHANISM WILL INCLUDE HOLDING BRAKE TO KEEP THE RETURN SPRING FROM DRAWING THE ACTUATOR FROM DRIVING TOWARD ITS NORMAL POSITION UNLESS POWER IS INTERRUPTED. SUPPLY AND INSTALL ELECTRIC MOTOR OPERATORS FOR ALL DAMPERS. UNIT SHALL BE HONEYWELL MS8105A SERIES OR APPROVED EQUAL.

C. AUTOMATIC DAMPERS: ALL CONTROL DAMPERS SHALL BE STANDARD PRODUCTS OF DAMPER OR TEMPERATURE CONTROL MANUFACTURERS UNLESS NOTED OTHERWISE. LOCAL FABRICATION OF DAMPERS IS NOT ALLOWED. DAMPERS SHALL BE OPPOSED BLADE TYPE. FURNISH FOR INSTALLATION BY THE MECHANICAL CONTRACTOR ALL MOTOR OPERATED DAMPERS. DAMPERS SHALL BE RUSKIN MODEL CD50. GREENHECK IN AN APPROVED EQUAL.

D. THERMOSTATS:
1. PROVIDE HVAC THERMOSTAT WITH THE FOLLOWING FEATURES: SEVEN DAY PROGRAMMING, TWO OCCUPIED/TWO UNOCCUPIED PERIODS PER DAY, AUTOMATIC HEAT/COOL CHANGEOVER WITH 2°F MINIMUM DEAD BAND, TWO STAGE HEATING, TWO STAGE COOLING, TOUCHSCREEN DISPLAY, AUXILIARY-CONTACT, AND TEMPERATURE OVERRIDE. THERMOSTAT SHALL BE HONEYWELL VISIONPRO 8000 OR EQUAL.
2. PROVIDE HEATER AND VENTILATION THERMOSTAT WITH THE FOLLOWING FEATURES: SINGLE STAGE CONTROL, ON/OFF/AUTO SWITCHING, AND ADJUSTABLE SETPOINT CONTROL

E. TEMPERATURE CONTROL WIRING:
1. ALL CONTROL WIRING AND CONDUIT REQUIRED TO COMPLETE THE TEMPERATURE CONTROL SYSTEM SHALL BE PROVIDED BY THE TEMPERATURE CONTROL SUB-CONTRACTOR. ALL WIRING SHALL CONFORM TO STANDARDS AND SPECIFICATIONS OUTLINED IN DIVISION 16. WIRE SIZE SHALL BE IN ACCORDANCE WITH MANUFACTURER'S RECOMMENDATIONS AND NATIONAL ELECTRIC CODE. MINIMUM CONDUIT SHALL BE 1/2 INCH DIAMETER. TCSC SHALL COORDINATE ALL CONTROL POWER REQUIREMENTS WITH ELECTRICAL CONTRACTOR PRIOR TO BID.
2. ELECTRIC CONNECTIONS BETWEEN THE VARIOUS UNIT CONTROL CABINETS SHALL BE MADE BY THE TCSC. ALL WIRING MUST BE TAGGED ON BOTH ENDS WITH PANEL NUMBER AND TERMINAL NUMBER.
3. THE TCSC IS RESPONSIBLE FOR ALL REQUIRED PROCESS AND ELECTRICAL CONNECTIONS TO ALL EQUIPMENT, CONTROL DEVICES, AND FIELD INSTRUMENTS. TCSC SHALL FURNISH AND INSTALL ALL CONDUITS, RACEWAYS, ETC., REQUIRED. TCSC SHALL FURNISH AND INSTALL ALL CONTROL AND INTERLOCK WIRING. TCSC SHALL FURNISH AND INSTALL ALL REQUIRED AUXILARY STARTER CONTACTS OR RELAYS, ETC., FOR A COMPLETE ELECTRICAL INTERLOCK AND CONTROL WIRING SYSTEM.

F. INSTALLATION:
1. THE ENTIRE CONTROL SYSTEM, INCLUDING LOW VOLTAGE WIRING, WITH THE EXCEPTION OF DUCT MOUNTED AUTOMATIC DAMPERS AND SMOKE DETECTORS, SHALL BE INSTALLED BY THE TEMPERATURE CONTROL CONTRACTOR, WHO SHALL MAKE ALL TESTS AND ADJUSTMENTS. ALL CONTROLS SHALL BE FIELD-TESTED AND FIELD-CALIBRATED.
2. SET POINTS OF ALL CONTROLLING INSTRUMENTS ARE INDICATED AT A SPECIFIC POINT; HOWEVER, ALL SET POINTS SHALL BE ADJUSTABLE UP AND DOWN FROM THE POINT INDICATED.
3. CONTRACTOR SHALL SUBMIT TENTATIVE LOCATIONS OF ALL CONTROL DEVICES AND COMPONENTS (INCLUDING TEMPERATURE SENSORS) TO THE ARCHITECT FOR WRITTEN APPROVAL PRIOR TO INSTALLATION. CONTRACTOR SHALL PAY PARTICULAR ATTENTION TO LOCATION OF CONTROL DEVICES AND COMPONENTS TO LOCATION OF CONTROL DEVICES AND COMPONENTS. EFFECTS OF DRAFTS, RADIANT HEAT, VIBRATION, ETC ARE TO BE CONSIDERED WHEN INSTALLING CONTROL DEVICES AND COMPONENTS.
4. PRIOR TO ORDERING FACTORY ASSEMBLED EQUIPMENT WHICH CONTAINS INTEGRAL CONTROL DEVICES AND COMPONENTS, THE CONTRACTOR SHALL OBTAIN A WRITTEN STATEMENT FROM BOTH THE MANUFACTURER AND THE INSTALLING CONTRACTOR THAT THEY HAVE REVIEWED THE APPROPRIATE SUBMITTAL DATA AND ARE AWARE OF THE MAKE, MODEL, TYPE, SIZE, CHARACTERISTICS, ETC. OF THE FACTORY ASSEMBLED CONTROL DEVICES AND COMPONENTS WHICH THEY SHALL BE REQUIRED TO INTERFACE TO AND/OR CONTROL.
5. ALL CONTROL DEVICES (BOTH FIELD AND PANEL MOUNTED) SHALL BE LABELED TO INDICATE BOTH THEIR CONTROL SYSTEMS DESIGNATION, E.G., RTU-1 THERMOSTAT. UNLESS INDICATOTHERWISE, ABBREVIATIONS AND ACRONYMS FOR ALL ID TAGS AND PANEL FACEPLATES SHALL BE APPROVED BY THE ENGINEER.
6. ALL CONTROL DEVICES ARE TO BE MOUNTED IN ACCESSIBLE LOCATIONS. ALL DEVICES EXPOSED TO THE WEATHER SHALL BE HOUSED IN WEATHERPROOF ENCLOSURES.
7. AT THE COMPLETION OF THE JOB, TCSC SHALL CORRECT HIS DRAWINGS TO INCLUDE ANY CHANGES MADE DURING CONSTRUCTION. TCSC SHALL PROVIDE COLOR-CODED DRAWINGS INDICATED ALL TEMPERATURE ZONES AND EQUIPMENT (3 COPIES).

G. OPERATION TEST AND OWNER'S INSTRUCTION:
1. AT COMPLETION, TCSC SHALL OPERATE THE SYSTEM FOR A PERIOD OF AT LEAST THREE DAYS OF EIGHT HOURS EACH ON THE NEW SYSTEMS TO DEMONSTRATE FULFILLMENT OF THE REQUIREMENTS OF THE CONTRACT. DURING THIS TIME, ALL ADJUSTMENTS SHALL BE MADE TO THE EQUIPMENT SO THAT IT IS IN FIRST-CLASS OPERATING CONDITION. THE ENTIRE SYSTEM IS TO BE LEFT IN OPERATING CONDITION ACCEPTABLE TO THE ENGINEER.
2. UPON COMPLETION OF THE WORK AND ACCEPTANCE BY THE OWNER, TCSC SHALL PROVIDE ONE SCHEDULED FOUR-HOUR PERIOD OF FORMAL INSTRUCTION TO THE OWNER'S OPERATING PERSONNEL WHO HAVE RESPONSIBILITY FOR THE MECHANICAL SYSTEM.

H. SEQUENCE OF OPERATIONS:
1. HVAC UNITS:
   1. NORMAL OPERATION:
      1. UNITS SHALL BE CONTROLLED BY SPACE THERMOSTAT. FAN SHALL OPERATE CONTINUOUSLY DURING OCCUPIED MODE AND INTERMITTENTLY DURING UNOCCUPIED MODE.
      2. HEATING AND COOLING SHALL BE ENABLED BY THERMOSTAT.
      3. COOLING SETPOINT SHALL BE 73°F (ADJUSTABLE).
      4. HEATING SETPOINT SHALL BE 68°F (ADJUSTABLE).
      5. OUTSIDE AIR DAMPER SHALL OPEN DURING OCCUPIED MODE AND CLOSE DURING UNOCCUPIED MODE. OUTSIDE AIR DAMPER SHALL BE NORMALLY CLOSED AND RETURN TO NORMAL POSITION UPON LOSS OF POWER.
2. EXHAUST FANS:
   1. INTERLOCK EXHAUST FANS AS NOTED ON SCHEDULE.

SECTION 15936 - REGISTERS, GRILLES AND DIFFUSERS

A. PRODUCT PERFORMANCE DATA SHALL BE TAKEN FROM TESTS CONDUCTED IN ACCORDANCE WITH ANSI/ASHRAE 70, AND ARI-890.

B. THE NOMINAL OR DUCT CONNECTION SIZE OF GRILLES (NOT OVERALL DIMENSIONS) IS GIVEN ON PLANS. GRILLES AND REGISTERS INCLUDING VOLUME CONTROLLERS SHALL BE CONSTRUCTED OF THE SAME MATERIALS SPECIFIED FOR THE GRILLE. THE GRILLE FINISH SHALL BE WHITE UNLESS NOTED OTHERWISE.

C. REFER TO ARCHITECTURAL DRAWINGS FOR THE VARIOUS CEILING TYPES. REFER TO DRAWINGS OF REFLECTED CEILING PLANS FOR LOCATION OF CEILING DIFFUSERS AND GRILLES. MOUNTING FRAMES SHALL BE PROVIDED FOR ALL GRILLES AND REGISTERS MOUNTED IN DRYWALL, PLASTER, CONCRETE OR MASONRY OPENINGS.

D. SUPPLIER SHALL CHECK ALL AIR DISTRIBUTION AND RETURN AIR DEVICES FOR PROPER PERFORMANCE, NOISE AND ACCESSORIES. ANY DEVICE EXCEEDING NOISE LEVEL HEREIN SPECIFIED SHALL BE BROUGHT TO THE ATTENTION OF THE ENGINEERS.

E. CONTRACTOR SHALL COORDINATE OPENINGS IN HARD CEILINGS, FURRED WALLS, MASONRY WALLS, AND FLOORS. MOUNT EACH DEVICE SECURELY TO AVOID RATTLING AND VIBRATION. DEVICES SHALL BE PARALLEL TO THE PLANE OF THE SURFACES THEY ARE MOUNTED.

F. CEILING DIFFUSER TYPE A - TITUS MODEL TDC STEEL LOUVERED FACE DIFFUSER WITH 12 X 12 INCH MODULE AND 9 X 9 INCH UNIFORM BACKPAN. DIFFUSER SHALL INCLUDE ROUND NECK, REMOVABLE CORE OF FIXED DEFLECTION LOUVERS AND EQUALIZING GRID. DIFFUSER SHALL BE SUITABLE FOR SURFACE MOUNTING WITH AIR PATTERN AS SHOWN ON DRAWINGS.

G. RETURN/EXHAUST/GRILLES TYPE A - TITUS MODEL 350 RL STEEL GRILLE. GRILL SHALL INCLUDE ONE SET OF FIXED BLADES SET AT 35º DEFLECTION ON 3/4 INCH SPACING.

H. RETURN/EXHAUST/GRILLES TYPE B - TITUS MODEL 50F ALUMINUM EGG CRATE GRILL. GRILLE SHALL INCLUDE 2 X 2 X 2 INCH ALUMINUM GRID.

I. RETURN/EXHAUST GRILLES TYPE C - TITUS MODEL 33R STEEL HEAVY DUTY BAR GRILLE. GRILLE SHALL INCLUDE ONE SET OF FIXED BLADES SET AT 38º DEFLECTION ON 2 INCH SPACING. BARS SHALL BE 14 GAUGE STEEL. BARS SHALL BE REINFORCED BY PERPENDICULAR STEEL BARS SPACED ON 6 INCH MAXIMUM CENTERS.

SECTION 15990 - TESTING, ADJUSTING AND BALANCING

A. THE TEST AND BALANCE CONTRACTOR SHALL BE AN INDEPENDENT CONTRACTOR THAT REGULARLY PERFORMS AIR AND WATER SYSTEMS TESTING AND BALANCING. MINIMUM QUALIFICATIONS FOR ACCEPTANCE SHALL BE GENERAL MEMBERSHIP IN NEBB OR AABC, EXCEPT THAT AFFILIATION WITH MANUFACTURERS, INSTALLING, CONTRACTORS, OR ENGINEERING FIRMS MAY NOT PRECLUDE ACCEPTANCE.

B. PERFORM TESTING AND BALANCING PROCEDURES ON EACH SYSTEM ACCORDING TO THE PROCEDURES CONTAINED IN ASHRAE APPLICATIONS HANDBOOK, AABC OR NEBB NATIONAL STANDARDS.

C. CUT INSULATION, DUCTS, PIPES, AND EQUIPMENT CABINETS FOR INSTALLATION OF TEST PROBES TO THE MINIMUM EXTENT NECESSARY TO ALLOW ADEQUATE PERFORMANCE OF PROCEDURES. AFTER TESTING AND BALANCING, CLOSE PROBE HOLES AND PATCH INSULATION WITH NEW MATERIALS IDENTICAL TO THOSE REMOVED. RESTORE VAPOR BARRIER AND FINISH ACCORDING TO THE INSULATION SPECIFICATIONS FOR THIS PROJECT.

D. MARK EQUIPMENT SETTINGS WITH PAINT OR OTHER SUITABLE, PERMANENT IDENTIFICATION MATERIAL, INCLUDING DAMPER-CONTROL POSITIONS, VALVE INDICATORS, FAN-SPEED-CONTROL LEVERS, AND SIMILAR CONTROLS AND DEVICES, TO SHOW FINAL SETTINGS.

E. SET HVAC SYSTEM AIRFLOW AND WATER FLOW RATES WITHIN THE FOLLOWING TOLERANCES:
1. SUPPLY, RETURN, AND EXHAUST FANS: PLUS 5 TO PLUS 10 PERCENT.
2. AIR OUTLETS AND INLETS: 0 TO MINUS 10 PERCENT.
3. HEATING-WATER FLOW RATE: 0 TO MINUS 10 PERCENT.
4. COOLING-WATER FLOW RATE: 0 TO MINUS 5 PERCENT.

F. WITHIN 90 DAYS OF COMPLETING TESTING, ADJUSTING, AND BALANCING, PERFORM ADDITIONAL TESTING AND BALANCING TO VERIFY THAT BALANCED CONDITIONS ARE BEING MAINTAINED THROUGHOUT AND TO CORRECT UNUSUAL CONDITIONS. IF INITIAL TESTING, ADJUSTING, AND BALANCING PROCEDURES WERE NOT PERFORMED DURING NEAR-PEAK SUMMER AND WINTER CONDITIONS, PERFORM ADDITIONAL INSPECTIONS, TESTING, AND ADJUSTING DURING NEAR-PEAK SUMMER AND WINTER CONDITIONS.

G. THE MECHANICAL CONTRACTOR=S RESPONSIBILITIES: FURNISH THE TEST AND BALANCE CONTRACTOR ONE COMPLETE SET OF ACCEPTED EQUIPMENT DATA AND ONE COMPLETE SET OF ACCEPTED MECHANICAL SHOP DRAWINGS. THE MECHANICAL CONTRACTOR SHALL BE RESPONSIBLE FOR ADVISING THE TEST AND BALANCE CONTRACTOR OF ANY CHANGE(S) MADE TO THE SYSTEM(S) DURING THE CONSTRUCTION PROCESS. MECHANICAL CONTRACTOR SHALL PROVIDE DRAWINGS, SPECIFICATIONS, SHOP DRAWINGS, CONTROL DIAGRAMS, ETC. DETAILING THE CHANGE(S) TO THE TEST AND BALANCE CONTRACTOR. REPLACE AND/OR INSTALL PULLEYS, BELTS, DAMPERS AND TRIM PUMP IMPELLERS AS REQUIRED FOR THE CORRECT BALANCE AS DIRECTED BY THE TEST AND BALANCE CONTRACTOR. ALLOCATE TIME IN THE CONSTRUCTION SCHEDULE FOR TEST AND BALANCE PROCEDURE, ASSIST THE TEST AND BALANCE CONTRACTOR IN COORDINATING WORK WITH THE OTHER TRADES, AND PREPARE THE SYSTEM FOR TESTING AND BALANCING.

Pinnacle ENGINEERING, INC.
Engineering & Design Consultants
2111 Parkway Office Circle, Suite 125
Birmingham, AL 35244
(205) 733-6912 FAX: (205) 733-6913
Job No.24207

AHO ARCHITECTS
a sole proprietorship
www.ahoarch.com

STATE OF KENTUCKY
JEFFREY BOYER
40070
LICENSED PROFESSIONAL ARCHITECT
10/4/24

Express Oil Change & T

Pinnacle ENGINEERING, INC

Engineering & Design Consultants
2111 Parkway Office Circle, Suite 125
Birmingham, AL 35244
(205) 733-6912 FAX: (205) 733-6913
Job No.24207

COM*check* Software Version COMcheckWeb
Mechanical Compliance Certificate

Project Information

Energy Code: 2012 IECC
Project Title: EOC - Morehead, KY
Location: Morehead (Rowan), Kentucky
Climate Zone: 4a
Project Type: New Construction

Construction Site:
Morehead, Kentucky

Owner/Agent:
Express Oil Change & Tire Engineers
1880 Southpark Drive
Birmingham, Alabama 35244
2059451771
jdavis@expressoil.com

Designer/Contractor:
Jeff Boyer
Pinnacle Engineering
2031 Shady Crest Drive
Hoover, Alabama 35216

Additional Efficiency Package(s)

Credits: 1.0 Required 0.0 Proposed

Mechanical Systems List

Quantity	System Type & Description
1	GFF-1 (Single Zone): Heating: 1 each - Central Furnace, Gas, Capacity = 40 kBtu/h Proposed Efficiency = 96.00% Et, Required Efficiency: 80.00 % Et (or 78% AFUE) Cooling: 1 each - Split System, Capacity = 33 kBtu/h, Air-Cooled Condenser, Unknown Economizer Proposed Efficiency = 14.30 SEER, Required Efficiency >= 13.00 SEER Proposed Part Load Efficiency = 0.00 , Required Part Load Efficiency = 0.00 Fan System: FAN SYSTEM 1 | office -- Compliance (Motor nameplate HP and fan efficiency method) : Passes Fans: FAN 1 Supply, Constant Volume, 1000 CFM, 0.3 motor nameplate hp SYSTEM COMPLIANCE FAILS: Economizer requirements have not been met
2	UH-1,2 (Unknown w/ PerimeterSystem): Heating: 1 each - Unit Heater, Gas, Capacity = 150 kBtu/h Proposed Efficiency = 83.00% Ec, Required Efficiency: 80.00 % Ec
2	UH-3,4 (Unknown w/ PerimeterSystem): Heating: 1 each - Unit Heater, Gas, Capacity = 200 kBtu/h Proposed Efficiency = 83.00% Ec, Required Efficiency: 80.00 % Ec
1	Water Heater: Electric Storage Water Heater, Capacity: 30 gallons w/ Circulation Pump No minimum efficiency requirement applies

Mechanical Compliance Statement

Compliance Statement: The proposed mechanical design represented in this document is consistent with the building plans, specifications, and other calculations submitted with this permit application. The proposed mechanical systems have been designed to meet the 2012 IECC requirements in COMcheck Version COMcheckWeb and to comply with any applicable mandatory requirements listed in the Inspection Checklist.

Jeff Boyer, PE ______ [signature] ______ 10/7/24
Name - Title ______ Signature ______ Date

COM*check* Software Version COMcheckWeb
Inspection Checklist

Energy Code: 2012 IECC

Requirements: 54.0% were addressed directly in the COM*check* software

Text in the "Comments/Assumptions" column is provided by the user in the COMcheck Requirements screen. For each requirement, the user certifies that a code requirement will be met and how that is documented, or that an exception is being claimed. Where compliance is itemized in a separate table, a reference to that table is provided.

Section # & Req.ID	Plan Review	Complies?	Comments/Assumptions
C103.2 [PR1]	Plans and/or specifications provide all information with which compliance can be determined for the building envelope and document where exceptions to the standard are claimed.	☐Complies ☐Does Not ☐Not Observable ☐Not Applicable	
C103.2 [PR2]	Plans, specifications, and/or calculations provide all information with which compliance can be determined for the mechanical systems and equipment and document where exceptions to the standard are claimed. Load calculations per acceptable engineering standards and handbooks.	☐Complies ☐Does Not ☐Not Observable ☐Not Applicable	Requirement will be met.
C103.2 [PR3]	Plans, specifications, and/or calculations provide all information with which compliance can be determined for the service water heating systems and equipment and document where exceptions to the standard are claimed. Hot water system sized per manufacturer's sizing guide.	☐Complies ☐Does Not ☐Not Observable ☐Not Applicable	Requirement will be met.
C103.2 [PR4]	Plans, specifications, and/or calculations provide all information with which compliance can be determined for the interior lighting and electrical systems and equipment and document where exceptions to the standard are claimed. Information provided should include interior lighting power calculations, wattage of bulbs and ballasts, transformers and control devices.	☐Complies ☐Does Not ☐Not Observable ☐Not Applicable	
C103.2 [PR8]	Plans, specifications, and/or calculations provide all information with which compliance can be determined for the exterior lighting and electrical systems and equipment and document where exceptions to the standard are claimed. Information provided should include exterior lighting power calculations, wattage of bulbs and ballasts, transformers and control devices.	☐Complies ☐Does Not ☐Not Observable ☐Not Applicable	
C406 [PR9]	Plans, specifications, and/or calculations provide all information with which compliance can be determined for the additional energy efficiency package options.	☐Complies ☐Does Not ☐Not Observable ☐Not Applicable	

1 High Impact (Tier 1) | 2 Medium Impact (Tier 2) | 3 Low Impact (Tier 3)

Section # & Req.ID	Plan Review	Complies?	Comments/Assumptions
C402.3.1 [PR10]	The vertical fenestration area <= 30 percent of the gross above-grade wall area.	☐Complies ☐Does Not ☐Not Observable ☐Not Applicable	
C402.3.1 [PR11]	The skylight area <= 3 percent of the gross roof area.	☐Complies ☐Does Not ☐Not Observable ☐Not Applicable	
C402.3.2 [PR14]	In enclosed spaces > 10,000 ft2 directly under a roof with ceiling heights >15 ft. and used as an office, lobby, atrium, concourse, corridor, storage, gymnasium/exercise center, convention center, automotive service, manufacturing, non-refrigerated warehouse, retail store, distribution/sorting area, transportation, or workshop, the following requirements apply: (a) the daylight zone under skylights is >= half the floor area; (b) the skylight area to daylight zone is >= 3 percent with a skylight VT >= 0.40; or a minimum skylight effective aperture >= 1 percent.	☐Complies ☐Does Not ☐Not Observable ☐Not Applicable	
C402.3.2.2 [PR15]	Skylights in office, storage, automotive service, manufacturing, non-refrigerated warehouse, retail store, and distribution/sorting area have a measured haze value > 90 percent unless designed to exclude direct sunlight.	☐Complies ☐Does Not ☐Not Observable ☐Not Applicable	

Additional Comments/Assumptions:

1 High Impact (Tier 1) | 2 Medium Impact (Tier 2) | 3 Low Impact (Tier 3)

Section # & Req.ID	Footing / Foundation Inspection	Complies?	Comments/Assumptions
C104 [FO3]	Installed slab-on-grade insulation type and R-value consistent with insulation specifications reported in plans and COMcheck reports.	☐Complies ☐Does Not ☐Not Observable ☐Not Applicable	*See the Envelope Assemblies table for values.*
C303.2 [FO4]	Slab edge insulation installed per manufacturer's instructions.	☐Complies ☐Does Not ☐Not Observable ☐Not Applicable	
C402.2.6 [FO5]	Slab edge insulation depth/length. Slab insulation extending away from building is covered by pavement or >= 10 inches of soil.	☐Complies ☐Does Not ☐Not Observable ☐Not Applicable	*See the Envelope Assemblies table for values.*
C403.2.8.1 [FO6]	Exterior insulation protected against damage, sunlight, moisture, wind, landscaping and equipment maintenance activities.	☐Complies ☐Does Not ☐Not Observable ☐Not Applicable	
C403.2.4.5 [FO9]	Freeze protection and snow/ice melting system sensors for future connection to controls.	☐Complies ☐Does Not ☐Not Observable ☐Not Applicable	Requirement will be met.
C402.2.8 [FO12]	Bottom surface of floor structures incorporating radiant heating insulated to >=R-3.5.	☐Complies ☐Does Not ☐Not Observable ☐Not Applicable	*See the Envelope Assemblies table for values.*

Additional Comments/Assumptions:

1 High Impact (Tier 1) | 2 Medium Impact (Tier 2) | 3 Low Impact (Tier 3)

Section # & Req.ID	Framing / Rough-In Inspection	Complies?	Comments/Assumptions
C402.4.1.1, C402.4.2 [FR16]	The building envelope contains a continuous air barrier that is sealed in an approved manner and either constructed or tested in an approved manner. Air barrier penetrations are sealed in an approved manner.	☐Complies ☐Does Not ☐Not Observable ☐Not Applicable	
C402.4.3, C402.4.4 [FR18]	Factory-built fenestration and doors are labeled as meeting air leakage requirements.	☐Complies ☐Does Not ☐Not Observable ☐Not Applicable	
C402.4.7 [FR17]	Vestibules are installed on all building entrances. Doors have self-closing devices.	☐Complies ☐Does Not ☐Not Observable ☐Not Applicable	
C402.3.3, C402.3.4 [FR8]	Vertical fenestration U-Factor.	☐Complies ☐Does Not ☐Not Observable ☐Not Applicable	*See the Envelope Assemblies table for values.*
C402.3.3 [FR10]	Vertical fenestration SHGC value.	☐Complies ☐Does Not ☐Not Observable ☐Not Applicable	*See the Envelope Assemblies table for values.*
C303.1.3 [FR12]	Fenestration products rated in accordance with NFRC.	☐Complies ☐Does Not ☐Not Observable ☐Not Applicable	
C303.1.3 [FR13]	Fenestration products are certified as to performance labels or certificates provided.	☐Complies ☐Does Not ☐Not Observable ☐Not Applicable	

Additional Comments/Assumptions:

1 High Impact (Tier 1) | 2 Medium Impact (Tier 2) | 3 Low Impact (Tier 3)

Section # & Req.ID	Plumbing Rough-In Inspection	Complies?	Comments/Assumptions
C404.3 [PL5]	Temperature controls installed on service water heating systems (110 F for dwelling units and lavatories in public restrooms and 90 F for other occupancies.)	☐Complies ☐Does Not ☐Not Observable ☐Not Applicable	Requirement will be met.
C404.4 [PL3]	Automatic time switches installed to automatically switch off the recirculating hot-water system or heat trace.	☐Complies ☐Does Not ☐Not Observable ☐Not Applicable	Requirement will be met.

Additional Comments/Assumptions:

1 High Impact (Tier 1) | 2 Medium Impact (Tier 2) | 3 Low Impact (Tier 3)

Section # & Req.ID	Mechanical Rough-In Inspection	Complies?	Comments/Assumptions
C403.2.3 [ME55]	HVAC equipment efficiency verified.	☐Complies ☐Does Not ☐Not Observable ☐Not Applicable	*See the Mechanical Systems list for values.*
C402.4.5.1 [ME3]	Stair and elevator shaft vents have motorized dampers that automatically close.	☐Complies ☐Does Not ☐Not Observable ☐Not Applicable	
C402.4.5.2 [ME58]	Outdoor air and exhaust systems have motorized dampers that automatically shut when not in use and meet maximum leakage rates. Check gravity dampers where allowed.	☐Complies ☐Does Not ☐Not Observable ☐Not Applicable	
C403.2.5.1 [ME59]	Demand control ventilation provided for spaces >500 sq.ft. and >25 people/1000 sq.ft. occupant density and served by systems with air side economizer, auto modulating outside air damper control, or design airflow >3,000 cfm.	☐Complies ☐Does Not ☐Not Observable ☐Not Applicable	Requirement will be met.
C403.2.7 [ME60]	HVAC ducts and plenums insulated. Where ducts or plenums are installed in or under a slab, verification may need to occur during Foundation Inspection.	☐Complies ☐Does Not ☐Not Observable ☐Not Applicable	Requirement will be met.
C403.2.8 [ME61]	HVAC piping insulation thickness. Where piping is installed in or under a slab, verification may need to occur during Foundation Inspection.	☐Complies ☐Does Not ☐Not Observable ☐Not Applicable	Requirement will be met.
C403.2.8 [ME61]	HVAC piping insulation thickness. Where piping is installed in or under a slab, verification may need to occur during Foundation Inspection.	☐Complies ☐Does Not ☐Not Observable ☐Not Applicable	Requirement will be met.
C403.2.8 [ME61]	HVAC piping insulation thickness. Where piping is installed in or under a slab, verification may need to occur during Foundation Inspection.	☐Complies ☐Does Not ☐Not Observable ☐Not Applicable	Requirement will be met.
C403.2.8. [ME7]	Piping insulation exposed to weather is protected from damage (due to sun, moisture, wind, etc.).	☐Complies ☐Does Not ☐Not Observable ☐Not Applicable	Requirement will be met.
C403.2.8 [ME41]	Thermally ineffective panel surfaces of sensible heating panels have insulation >= R-3.5.	☐Complies ☐Does Not ☐Not Observable ☐Not Applicable	Requirement will be met.
C403.3.1.4 [NA]	Total cooling capacity without economizers must be less than %varMaxKBtuPerH%.	☐Complies ☐Does Not ☐Not Observable ☐Not Applicable	
C403.2.7 [ME10]	Ducts and plenums sealed based on static pressure and location.	☐Complies ☐Does Not ☐Not Observable ☐Not Applicable	Requirement will be met.

1 High Impact (Tier 1) | 2 Medium Impact (Tier 2) | 3 Low Impact (Tier 3)

Section # & Req.ID	Mechanical Rough-In Inspection	Complies?	Comments/Assumptions
C403.2.7.1.3 [ME11]	Ductwork operating >3 in. water column requires air leakage testing.	☐Complies ☐Does Not ☐Not Observable ☐Not Applicable	**Exception:** Requirement does not apply.
C403.2.7.1.3 [ME11]	Ductwork operating >3 in. water column requires air leakage testing.	☐Complies ☐Does Not ☐Not Observable ☐Not Applicable	**Exception:** Requirement does not apply.
C403.2.7.1.3 [ME11]	Ductwork operating >3 in. water column requires air leakage testing.	☐Complies ☐Does Not ☐Not Observable ☐Not Applicable	**Exception:** Requirement does not apply.
C403.3.1, C403.3.1.1 [ME62]	Air economizers provided where required, meet the requirements for design capacity, control signal, ventilation controls, high-limit shut-off, integrated economizer control, and provide a means to relieve excess outside air during operation.	☐Complies ☐Does Not ☐Not Observable ☐Not Applicable	Requirement will be met.
C408.2.2.1 [ME53]	Air outlets and zone terminal devices have means for air balancing.	☐Complies ☐Does Not ☐Not Observable ☐Not Applicable	Requirement will be met.
C403.4.2 [ME66]	VAV fan motors >=7.5 hp to be driven by variable speed drive, have a vane-axial fan with variable pitch blades, or have controls to limit fan motor demand.	☐Complies ☐Does Not ☐Not Observable ☐Not Applicable	**Exception:** Requirement does not apply.
C403.4.2 [ME66]	VAV fan motors >=7.5 hp to be driven by variable speed drive, have a vane-axial fan with variable pitch blades, or have controls to limit fan motor demand.	☐Complies ☐Does Not ☐Not Observable ☐Not Applicable	**Exception:** Requirement does not apply.
C403.4.2 [ME66]	VAV fan motors >=7.5 hp to be driven by variable speed drive, have a vane-axial fan with variable pitch blades, or have controls to limit fan motor demand.	☐Complies ☐Does Not ☐Not Observable ☐Not Applicable	**Exception:** Requirement does not apply.
C403.4.2 [ME66]	VAV fan motors >=7.5 hp to be driven by variable speed drive, have a vane-axial fan with variable pitch blades, or have controls to limit fan motor demand.	☐Complies ☐Does Not ☐Not Observable ☐Not Applicable	**Exception:** Requirement does not apply.
C403.2.6 [ME57]	Exhaust air energy recovery on systems meeting Table C403.2.6.	☐Complies ☐Does Not ☐Not Observable ☐Not Applicable	Requirement will be met.
C403.2.11 [ME71]	Unenclosed spaces that are heated use only radiant heat.	☐Complies ☐Does Not ☐Not Observable ☐Not Applicable	Requirement will be met.

Additional Comments/Assumptions:

1 High Impact (Tier 1) | 2 Medium Impact (Tier 2) | 3 Low Impact (Tier 3)

Section # & Req.ID	Rough-In Electrical Inspection	Complies?	Comments/Assumptions
C405.2.2.1 [EL22]	Automatic controls to shut off all building lighting installed in all buildings.	☐Complies ☐Does Not ☐Not Observable ☐Not Applicable	
C405.2.1.1 [EL23]	Independent lighting controls installed per approved lighting plans and all manual controls readily accessible and visible to occupants.	☐Complies ☐Does Not ☐Not Observable ☐Not Applicable	
C405.2.1.2 [EL15]	Lighting controls installed to uniformly reduce the lighting load by at least 50%.	☐Complies ☐Does Not ☐Not Observable ☐Not Applicable	
C405.2.2.3 [EL16]	Daylight zones provided with individual controls that control the lights independent of general area lighting.	☐Complies ☐Does Not ☐Not Observable ☐Not Applicable	
C405.2.3 [EL17]	Sleeping units have at least one master switch at the main entry door that controls wired luminaires and switched receptacles.	☐Complies ☐Does Not ☐Not Observable ☐Not Applicable	
C405.2.2.2 [EL18]	Occupancy sensors installed in required spaces.	☐Complies ☐Does Not ☐Not Observable ☐Not Applicable	
C405.2.2.3 [EL20]	Primary sidelighted areas are equipped with required lighting controls.	☐Complies ☐Does Not ☐Not Observable ☐Not Applicable	
C405.2.2.3 [EL21]	Enclosed spaces with daylight area under skylights and rooftop monitors are equipped with required lighting controls.	☐Complies ☐Does Not ☐Not Observable ☐Not Applicable	
C405.2.4 [EL25]	Automatic lighting controls for exterior lighting installed.	☐Complies ☐Does Not ☐Not Observable ☐Not Applicable	
C405.2.3 [EL4]	Separate lighting control devices for specific uses installed per approved lighting plans.	☐Complies ☐Does Not ☐Not Observable ☐Not Applicable	
C405.3 [EL19]	Fluorescent luminaires with odd numbered lamp configurations that are within 10 feet center to center (if recess mounted) or are within 1 foot edge to edge (if pendant or surface mounted) shall be tandem wired.	☐Complies ☐Does Not ☐Not Observable ☐Not Applicable	
C405.4 [EL6]	Exit signs do not exceed 5 watts per face.	☐Complies ☐Does Not ☐Not Observable ☐Not Applicable	

1 High Impact (Tier 1) | 2 Medium Impact (Tier 2) | 3 Low Impact (Tier 3)

Section # & Req.ID	Rough-In Electrical Inspection	Complies?	Comments/Assumptions
C405.6 [EL24]	Exterior grounds lighting over 100 W provides >60 lm/W unless on motion sensor or fixture is exempt from scope of code or from external LPD.	☐Complies ☐Does Not ☐Not Observable ☐Not Applicable	
C405.2.5 [ELX]	Additional interior lighting power allowed for special functions per the approved lighting plans and is automatically controlled and separated from general lighting.	☐Complies ☐Does Not ☐Not Observable ☐Not Applicable	

Additional Comments/Assumptions:

1 High Impact (Tier 1) | 2 Medium Impact (Tier 2) | 3 Low Impact (Tier 3)

Section # & Req.ID	Insulation Inspection	Complies?	Comments/Assumptions
C402.4.1.1 [IN1]	All sources of air leakage in the building thermal envelope are sealed, caulked, gasketed, weather stripped or wrapped with moisture vapor-permeable wrapping material to minimize air leakage.	☐Complies ☐Does Not ☐Not Observable ☐Not Applicable	
C402.4.2.1 [IN2]	Roof R-value. For some ceiling systems, verification may need to occur during Framing Inspection.	☐Complies ☐Does Not ☐Not Observable ☐Not Applicable	*See the Envelope Assemblies table for values.*
C303.2 [IN3]	Roof insulation installed per manufacturer's instructions. Blown or poured loose-fill insulation is installed only where the roof slope is <=3 in 12.	☐Complies ☐Does Not ☐Not Observable ☐Not Applicable	
C303.2 [IN7]	Above-grade wall insulation installed per manufacturer's instructions.	☐Complies ☐Does Not ☐Not Observable ☐Not Applicable	
C104 [IN8]	Installed floor insulation type and R-value consistent with insulation specifications reported in plans and COMcheck reports.	☐Complies ☐Does Not ☐Not Observable ☐Not Applicable	*See the Envelope Assemblies table for values.*
C303.1 [IN10]	Building envelope insulation is labeled with R-value or insulation certificate providing R-value and other relevant data.	☐Complies ☐Does Not ☐Not Observable ☐Not Applicable	
C303.2.1 [IN14]	Exterior insulation is protected from damage with a protective material. Verification for exposed foundation insulation may need to occur during Foundation Inspection.	☐Complies ☐Does Not ☐Not Observable ☐Not Applicable	

Additional Comments/Assumptions:

1 High Impact (Tier 1) | 2 Medium Impact (Tier 2) | 3 Low Impact (Tier 3)

Section # & Req.ID	Final Inspection	Complies?	Comments/Assumptions
C402.4.6 [FI37]	Weatherseals installed on all loading dock cargo doors.	☐Complies ☐Does Not ☐Not Observable ☐Not Applicable	
C403.2.4.1 [FI47]	Heating and cooling to each zone is controlled by a thermostat control. Minimum one humidity control device per installed humidification/dehumidification system.	☐Complies ☐Does Not ☐Not Observable ☐Not Applicable	Requirement will be met.
C403.2.4.1 [FI47]	Heating and cooling to each zone is controlled by a thermostat control. Minimum one humidity control device per installed humidification/dehumidification system.	☐Complies ☐Does Not ☐Not Observable ☐Not Applicable	Requirement will be met.
C403.2.4.1 [FI47]	Heating and cooling to each zone is controlled by a thermostat control. Minimum one humidity control device per installed humidification/dehumidification system.	☐Complies ☐Does Not ☐Not Observable ☐Not Applicable	Requirement will be met.
C403.2.4.2 [FI38]	Thermostatic controls have a 5 °F deadband.	☐Complies ☐Does Not ☐Not Observable ☐Not Applicable	Requirement will be met.
C403.2.4.2 [FI20]	Temperature controls have setpoint overlap restrictions.	☐Complies ☐Does Not ☐Not Observable ☐Not Applicable	Requirement will be met.
C403.2.4.3 [FI39]	Each zone equipped with setback controls using automatic time clock or programmable control system.	☐Complies ☐Does Not ☐Not Observable ☐Not Applicable	Requirement will be met.
C403.2.4.3 [FI40]	Automatic Controls: Setback to 55°F (heat) and 85°F (cool); 7-day clock, 2-hour occupant override, 10-hour backup	☐Complies ☐Does Not ☐Not Observable ☐Not Applicable	Requirement will be met.
C403.2.4.3.3 [FI41]	Systems include optimum start controls.	☐Complies ☐Does Not ☐Not Observable ☐Not Applicable	Requirement will be met.
C408.2.5.1 [FI7]	Furnished HVAC as-built drawings submitted within 90 days of system acceptance.	☐Complies ☐Does Not ☐Not Observable ☐Not Applicable	Requirement will be met.
C303.3, C408.2.5.3 [FI8]	Furnished O&M manuals for HVAC systems within 90 days of system acceptance.	☐Complies ☐Does Not ☐Not Observable ☐Not Applicable	Requirement will be met.
C408.2.5.3 [FI43]	An air and/or hydronic system balancing report is provided for HVAC systems.	☐Complies ☐Does Not ☐Not Observable ☐Not Applicable	Requirement will be met.

1 High Impact (Tier 1) | 2 Medium Impact (Tier 2) | 3 Low Impact (Tier 3)

Section # & Req.ID	Final Inspection	Complies?	Comments/Assumptions
C408.2.3.2 [FI10]	HVAC control systems have been tested to ensure proper operation, calibration and adjustment of controls.	☐Complies ☐Does Not ☐Not Observable ☐Not Applicable	Requirement will be met.
C404.3 [FI11]	Public lavatory faucet water temperature <=110°F.	☐Complies ☐Does Not ☐Not Observable ☐Not Applicable	Requirement will be met.
C404.5 [FI25]	All piping in circulating system insulated.	☐Complies ☐Does Not ☐Not Observable ☐Not Applicable	Requirement will be met.
C404.6 [FI12]	Controls are installed that limit the operation of a recirculation pump installed to maintain temperature of a storage tank.	☐Complies ☐Does Not ☐Not Observable ☐Not Applicable	Requirement will be met.
C402.4.8 [FI26]	Recessed luminaires in thermal envelope to limit infiltration and be IC rated and labeled. Seal between interior finish and luminaire housing.	☐Complies ☐Does Not ☐Not Observable ☐Not Applicable	
C403.2.2 [FI27]	HVAC systems and equipment capacity does not exceed calculated loads.	☐Complies ☐Does Not ☐Not Observable ☐Not Applicable	Requirement will be met.
C408.2.5.1 [FI16]	Furnished as-built drawings for electric power systems within 30 days of system acceptance.	☐Complies ☐Does Not ☐Not Observable ☐Not Applicable	
C303.3, C408.2.5.2 [FI17]	Furnished O&M instructions for systems and equipment to the building owner or designated representative.	☐Complies ☐Does Not ☐Not Observable ☐Not Applicable	
C405.5.2 [FI18]	Interior installed lamp and fixture lighting power is consistent with what is shown on the approved lighting plans, demonstrating proposed watts are less than or equal to allowed watts.	☐Complies ☐Does Not ☐Not Observable ☐Not Applicable	*See the Interior Lighting fixture schedule for values.*
C405.6.2 [FI19]	Exterior lighting power is consistent with what is shown on the approved lighting plans, demonstrating proposed watts are less than or equal to allowed watts.	☐Complies ☐Does Not ☐Not Observable ☐Not Applicable	*See the Interior Lighting fixture schedule for values.*
C408.2.1 [FI28]	Commissioning plan developed by registered design professional or approved agency.	☐Complies ☐Does Not ☐Not Observable ☐Not Applicable	Requirement will be met.
C408.2.4 [FI29]	Preliminary commissioning report completed and certified by registered design professional or approved agency.	☐Complies ☐Does Not ☐Not Observable ☐Not Applicable	Requirement will be met.

1 High Impact (Tier 1) | 2 Medium Impact (Tier 2) | 3 Low Impact (Tier 3)

Section # & Req.ID	Final Inspection	Complies?	Comments/Assumptions
C408.2.5.4 [FI30]	Final commissioning report due to building owner within 90 days of receipt of certificate of occupancy.	☐Complies ☐Does Not ☐Not Observable ☐Not Applicable	Requirement will be met.
C408.2.3.1 [FI31]	HVAC equipment has been tested to ensure proper operation.	☐Complies ☐Does Not ☐Not Observable ☐Not Applicable	Requirement will be met.
C408.2.3.3 [FI32]	Economizers have been tested to ensure proper operation.	☐Complies ☐Does Not ☐Not Observable ☐Not Applicable	Requirement will be met.
C408.3 [FI33]	Lighting systems have been tested to ensure proper calibration, adjustment, programming, and operation.	☐Complies ☐Does Not ☐Not Observable ☐Not Applicable	
C408.3 [FI48]	Lighting systems have been tested to ensure proper calibration, adjustment, programming, and operation.	☐Complies ☐Does Not ☐Not Observable ☐Not Applicable	

Additional Comments/Assumptions:

1 High Impact (Tier 1) | 2 Medium Impact (Tier 2) | 3 Low Impact (Tier 3)

AHO ARCHITECTS
a sole proprietorship
www.ahoarch.com

STATE OF KENTUCKY
JEFFREY BOYER
40070
REGISTERED PROFESSIONAL ENGINEER
10/4/24

Express Oil Change & Tire Engineers
Single Building / Right Hand Oil Change / Front Enter / Side Tire Storage
Morehead, Kentucky

FINAL

No.	Description	Date

© 2024 Aho Architects, LLC.
All Rights Reserved.

Mechanical Comcheck

Project number	24029
Date	10/04/2024
Drawn by	CA
Checked by	JB

M0.04

Scale 6" = 1'-0"

10/7/2024 10:32:37 AM

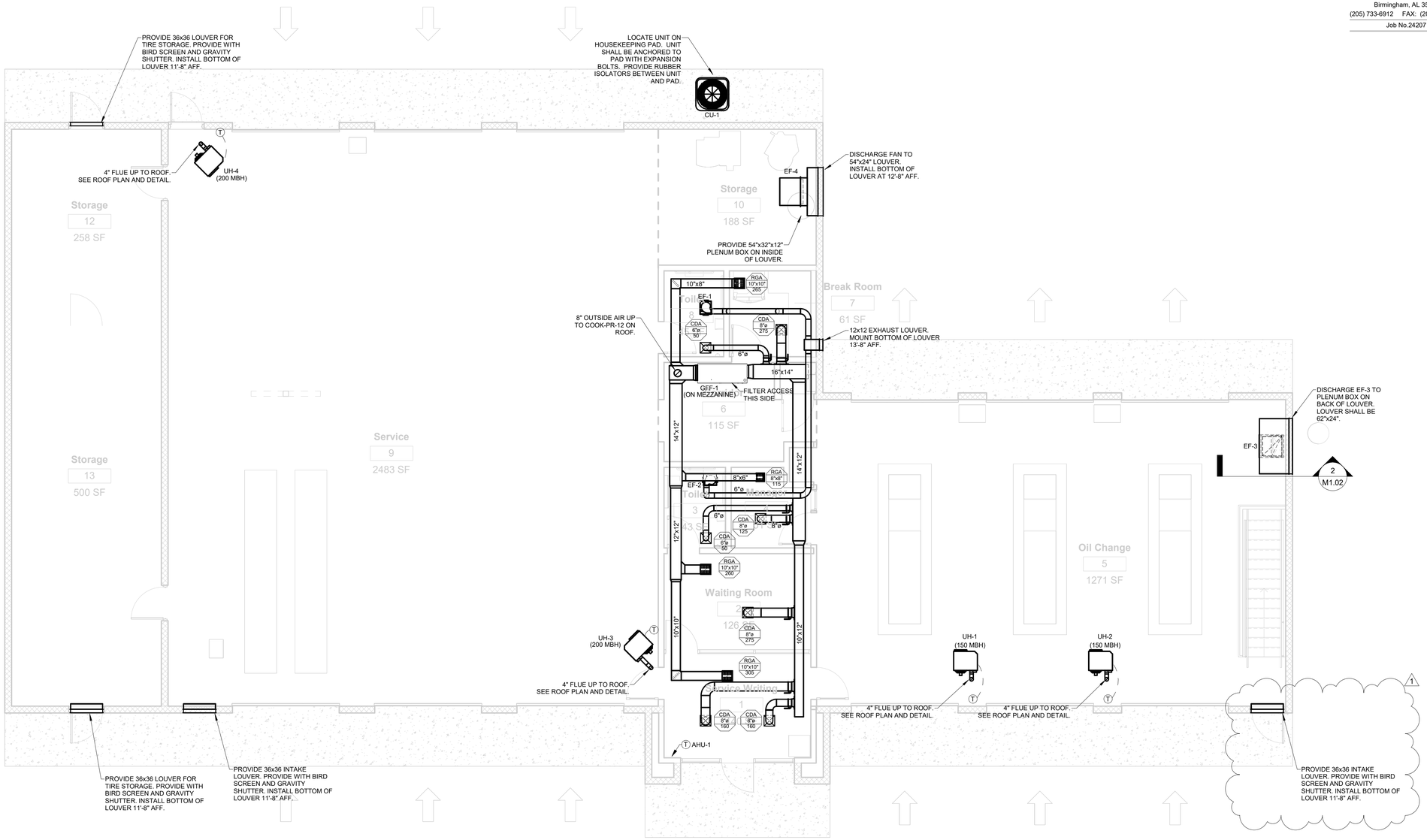

NORTH

MAIN FLOOR PLAN
MECHANICAL
3/16" = 1'-0"

GENERAL NOTES:

1. VERIFY EXISTING CONDITIONS IN FIELD PRIOR TO BEGINNING WORK.
2. SPACE ABOVE CEILING IS LIMITED. CAREFUL COORDINATION WITH LIGHTING, ELECTRICAL, PLUMBING, STRUCTURAL, AND ARCHITECTURAL WORK IS CRITICAL TO DUCTWORK INSTALLATION.
3. PROVIDE NECESSARY OFFSETS IN PIPING, ELECTRICAL CONDUIT, AND DUCTWORK AS REQUIRED TO ACCOMMODATE NEW WORK. DRAWINGS ARE DIAGRAMMATIC AND DO NOT SHOW ALL DETAILS NOR CHANGES IN DUCTWORK ELEVATIONS NECESSARY FOR COMPLETE INSTALLATION.
4. COORDINATE CEILING AIR DEVICE LOCATIONS WITH LIGHTING PLAN AND ARCHITECT'S REFLECTED CEILING PLAN.
5. DUCTWORK SHALL BE RUN TIGHT TO STRUCTURE. AVOID CROSSING OVER LIGHTS AND OTHER DUCTS DUE TO TIGHT CLEARANCES.
6. LOUVERS SHALL BE RUSKIN ELF6375D OR APPROVED EQUAL. PROVIDE UNIT WITH BIRDSCREEN AND MILL ALUMINUM FINISH. COORDINATE EXACT HEIGHT AND COLOR OF LOUVER WITH ARCHITECT PRIOR TO ORDERING.
7. MOUNT TEMPERATURE CONTROLS 48" ABOVE FINISHED FLOOR. COORDINATE EXACT LOCATION WITH ARCHITECT.
8. SPILL CONDENSATE FROM AHUS INTO NEAREST FLOOR DRAIN.
9. PROVIDE ENGRAVED PLASTIC LABEL AT TERMINATION OF EACH AUXILIARY CONDENSATE DRAIN LINE READING AS FOLLOWS:
   "AHU-### AUXILIARY DRAIN LINE."
   "NOTIFY MAINTENANCE PERSONNEL WHEN WATER IS FLOWING"
10. CONNECT CONDENSATE DRAIN PIPING TO AIR HANDLING UNITS IN ACCORDANCE WITH DETAILS.

1

Pinnacle ENGINEERING, INC.
Engineering & Design Consultants
2111 Parkway Office Circle, Suite 125
Birmingham, AL 35244
(205) 733-6912 FAX: (205) 733-6913
Job No.24207

AHO ARCHITECTS
a sole proprietorship
www.ahoarch.com

STATE OF KENTUCKY
JEFFREY BOYER
40070
LICENSED PROFESSIONAL ENGINEER
10/4/24

Express Oil Change & Tire Engineers

Single Building / Right Hand Oil Change / Front Enter / Side Tire Storage

Morehead, Kentucky

FINAL

No.	Description	Date
1	ASI 2	12/19/24

© 2024 Aho Architects, LLC. All Rights Reserved.

Mechanical Floor Plan

Project number	24029
Date	10/04/2024
Drawn by	CA
Checked by	JB

M1.01

Scale As indicated

12/19/2024 11:06:31 AM

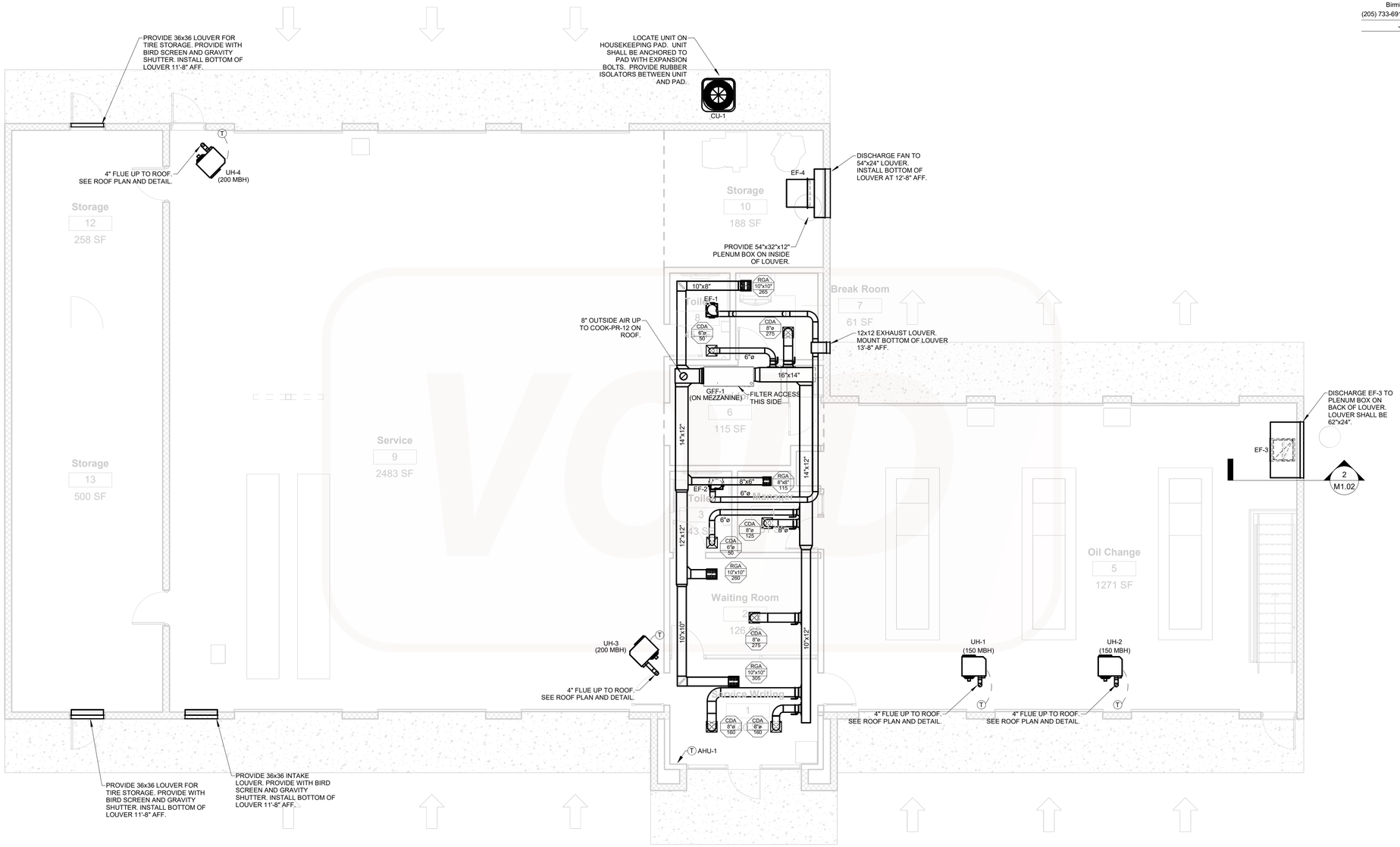

NORTH

MAIN FLOOR PLAN
MECHANICAL
3/16" = 1'-0"

GENERAL NOTES:

1. VERIFY EXISTING CONDITIONS IN FIELD PRIOR TO BEGINNING WORK.
2. SPACE ABOVE CEILING IS LIMITED. CAREFUL COORDINATION WITH LIGHTING, ELECTRICAL, PLUMBING, STRUCTURAL, AND ARCHITECTURAL WORK IS CRITICAL TO DUCTWORK INSTALLATION.
3. PROVIDE NECESSARY OFFSETS IN PIPING, ELECTRICAL CONDUIT, AND DUCTWORK AS REQUIRED TO ACCOMMODATE NEW WORK. DRAWINGS ARE DIAGRAMMATIC AND DO NOT SHOW ALL DETAILS NOR CHANGES IN DUCTWORK ELEVATIONS NECESSARY FOR COMPLETE INSTALLATION.
4. COORDINATE CEILING AIR DEVICE LOCATIONS WITH LIGHTING PLAN AND ARCHITECT'S REFLECTED CEILING PLAN.
5. DUCTWORK SHALL BE RUN TIGHT TO STRUCTURE. AVOID CROSSING OVER LIGHTS AND OTHER DUCTS DUE TO TIGHT CLEARANCES.
6. LOUVERS SHALL BE RUSKIN ELF6375D OR APPROVED EQUAL. PROVIDE UNIT WITH BIRDSCREEN AND MILL ALUMINUM FINISH. COORDINATE EXACT HEIGHT AND COLOR OF LOUVER WITH ARCHITECT PRIOR TO ORDERING.
7. MOUNT TEMPERATURE CONTROLS 48" ABOVE FINISHED FLOOR. COORDINATE EXACT LOCATION WITH ARCHITECT.
8. SPILL CONDENSATE FROM AHUS INTO NEAREST FLOOR DRAIN.
9. PROVIDE ENGRAVED PLASTIC LABEL AT TERMINATION OF EACH AUXILIARY CONDENSATE DRAIN LINE READING AS FOLLOWS:
   "AHU-### AUXILIARY DRAIN LINE."
   "NOTIFY MAINTENANCE PERSONNEL WHEN WATER IS FLOWING"
10. CONNECT CONDENSATE DRAIN PIPING TO AIR HANDLING UNITS IN ACCORDANCE WITH DETAILS.
11. OUTSIDE AIR VENTILATION INTAKES FOR OIL CHANGE AND SERVICE AREAS WILL BE PROVIDED BY OPEN ROLL-UP DOORS. DOORS SHALL BE OPEN WHILE VENTILATION SYSTEM IS ENABLED.

Pinnacle ENGINEERING, INC.
Engineering & Design Consultants
2111 Parkway Office Circle, Suite 125
Birmingham, AL 35244
(205) 733-6912 FAX: (205) 733-6913
Job No.24207

AHO ARCHITECTS
a sole proprietorship
www.ahoarch.com

STATE OF KENTUCKY
JEFFREY BOYER
40070
LICENSED PROFESSIONAL ENGINEER
10/4/24

Express Oil Change & Tire Engineers

Single Building / Right Hand Oil Change / Front Enter / Side Tire Storage

Morehead, Kentucky

FINAL

No.	Description	Date

© 2024 Aho Architects, LLC.
All Rights Reserved.

Mechanical Floor Plan

VOID

Project number	24029
Date	10/04/2024
Drawn by	CA
Checked by	JB

M1.01

Scale As indicated

10/7/2024 10:32:37 AM

Pinnacle ENGINEERING, INC.
Engineering & Design Consultants
2111 Parkway Office Circle, Suite 125
Birmingham, AL 35244
(205) 733-6912 FAX: (205) 733-6913
Job No.24207

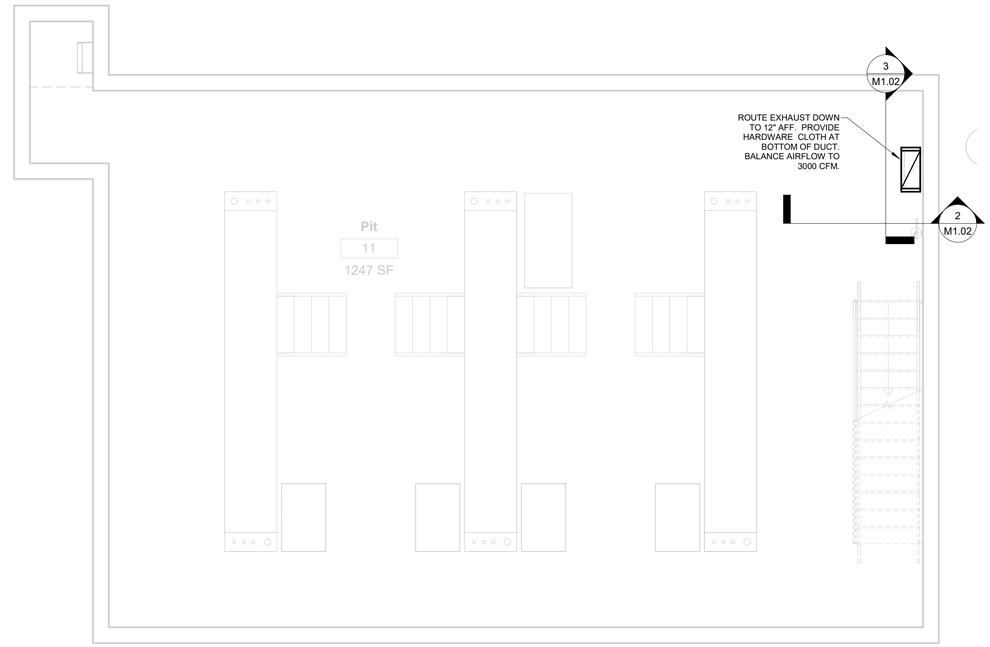

NORTH

PIT FLOOR PLAN
MECHANICAL
1/4" = 1'-0"

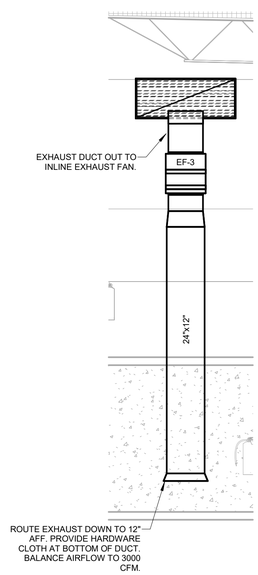

3 | M1.02 Section 2
1/4" = 1'-0"

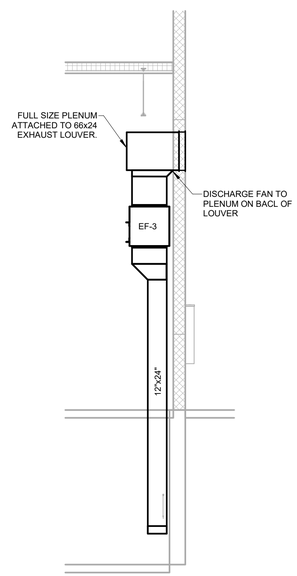

2 | M1.02 Section Through Pit Exhaust1
1/4" = 1'-0"

GENERAL NOTES:

1. VERIFY EXISTING CONDITIONS IN FIELD PRIOR TO BEGINNING WORK.
2. SPACE ABOVE CEILING IS LIMITED. CAREFUL COORDINATION WITH LIGHTING, ELECTRICAL, PLUMBING, STRUCTURAL, AND ARCHITECTURAL WORK IS CRITICAL TO DUCTWORK INSTALLATION.
3. PROVIDE NECESSARY OFFSETS IN PIPING, ELECTRICAL CONDUIT, AND DUCTWORK AS REQUIRED TO ACCOMMODATE NEW WORK. DRAWINGS ARE DIAGRAMMATIC AND DO NOT SHOW ALL DETAILS NOR CHANGES IN DUCTWORK ELEVATIONS NECESSARY FOR COMPLETE INSTALLATION.
4. COORDINATE CEILING AIR DEVICE LOCATIONS WITH LIGHTING PLAN AND ARCHITECT'S REFLECTED CEILING PLAN.
5. DUCTWORK SHALL BE RUN TIGHT TO STRUCTURE. AVOID CROSSING OVER LIGHTS AND OTHER DUCTS DUE TO TIGHT CLEARANCES.
6. LOUVERS SHALL BE RUSKIN ELF6375D OR APPROVED EQUAL. PROVIDE UNIT WITH BIRDSCREEN AND MILL ALUMINUM FINISH. COORDINATE EXACT HEIGHT AND COLOR OF LOUVER WITH ARCHITECT PRIOR TO ORDERING.
7. MOUNT TEMPERATURE CONTROLS 48" ABOVE FINISHED FLOOR. COORDINATE EXACT LOCATION WITH ARCHITECT.
8. SPILL CONDENSATE FROM AHUS INTO NEAREST FLOOR DRAIN.
9. PROVIDE ENGRAVED PLASTIC LABEL AT TERMINATION OF EACH AUXILIARY CONDENSATE DRAIN LINE READING AS FOLLOWS:
   "AHU-### AUXILIARY DRAIN LINE."
   "NOTIFY MAINTENANCE PERSONNEL WHEN WATER IS FLOWING"
10. CONNECT CONDENSATE DRAIN PIPING TO AHU IN ACCORDANCE WITH DETAILS.

AHO ARCHITECTS
a sole proprietorship
www.ahoarch.com

STATE OF KENTUCKY
JEFFREY BOYER
40070
PROFESSIONAL ENGINEER
10/4/24

Express Oil Change & Tire Engineers

Single Building / Right Hand Oil Change / Front Enter / Side Tire Storage

Morehead, Kentucky

FINAL

No.	Description	Date

© 2024 Aho Architects, LLC.
All Rights Reserved.

Partial Mechanical Floor Plans - Pit and Platform

Project number	24029
Date	10/04/2024
Drawn by	CA
Checked by	JB

M1.02

Scale As indicated

10/7/2024 10:32:38 AM

NORTH

MECHANICAL ROOF PLAN
3/16" = 1'-0"

GENERAL NOTES:

1. VERIFY EXISTING CONDITIONS IN FIELD PRIOR TO BEGINNING WORK.

Pinnacle ENGINEERING, INC.
Engineering & Design Consultants
2111 Parkway Office Circle, Suite 125
Birmingham, AL 35244
(205) 733-6912 FAX: (205) 733-6913
Job No.24207

AHO ARCHITECTS
a sole proprietorship
www.ahoarch.com

STATE OF KENTUCKY
JEFFREY BOYER
40070
LICENSED PROFESSIONAL ENGINEER
10/4/24

Express Oil Change & Tire Engineers

Single Building / Right Hand Oil Change / Front Enter / Side Tire Storage

Morehead, Kentucky

FINAL

No.	Description	Date

© 2024 Aho Architects, LLC.
All Rights Reserved.

Mechanical Roof Plan

Project number	24029
Date	10/04/2024
Drawn by	CRA
Checked by	JAB

M1.03

Scale	As indicated

10/7/2024 10:32:38 AM

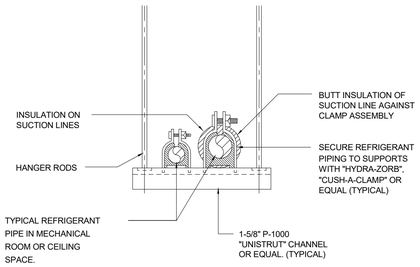

7 / M2.01 REFRIGERANT PIPING SUPPORT DETAIL
TYPICAL FOR PIPING SUSPENDED FROM STRUCTURE
NO SCALE

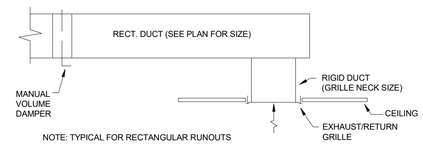

4 / M2.01 TYPICAL RETURN AND EXHAUST RUN-OUT DETAIL
NO SCALE

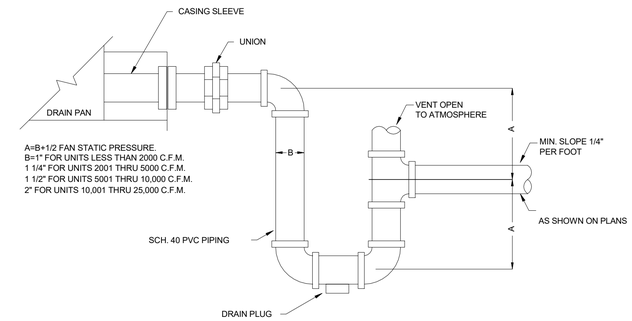

1 / M2.01 CONDENSATE DRAIN TRAP DETAIL
NO SCALE

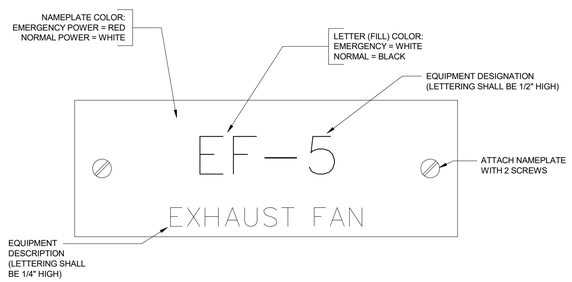

8 / M2.01 MECHANICAL EQUIPMENT NAMEPLATE DETAIL
NO SCALE

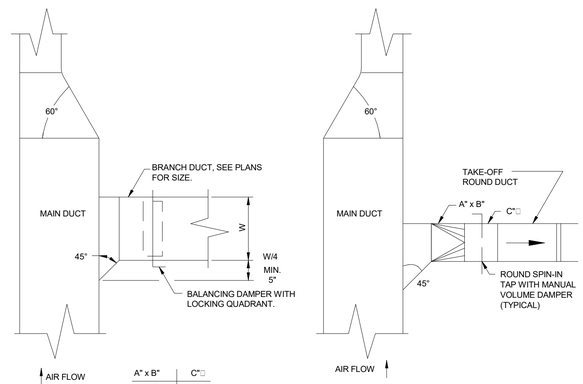

A" x B"	C"□
12x8	10
12x10	12
16x10	14
22x10	16

NOTE:
USE 45° BRANCH FITTING WHEN MAIN SUPPLY DUCT DEPTH IS EQUAL TO OR SMALLER THAN TAKE-OFF ROUND DUCT SIZE.

5 / M2.01 TYPICAL DUCT TAKEOFF DETAIL
NO SCALE

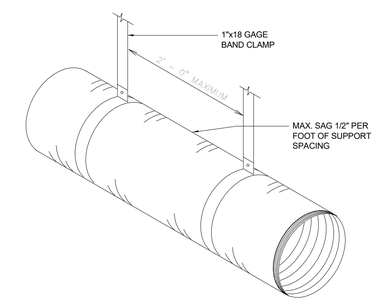

2 / M2.01 FLEXIBLE DUCT SUPPORT DETAIL
NO SCALE

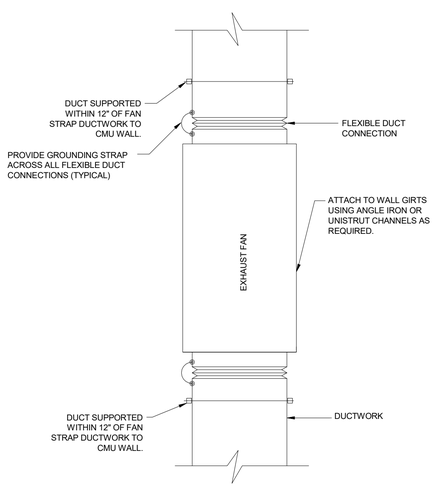

9 / M2.01 INLINE EXHAUST FAN DETAIL
NO SCALE

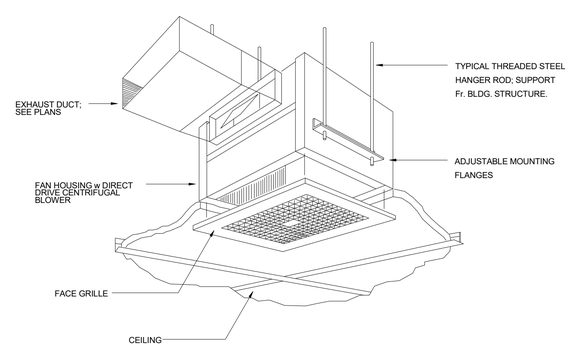

6 / M2.01 EXHAUST FAN INSTALLATION DETAIL(CEILING)
NO SCALE

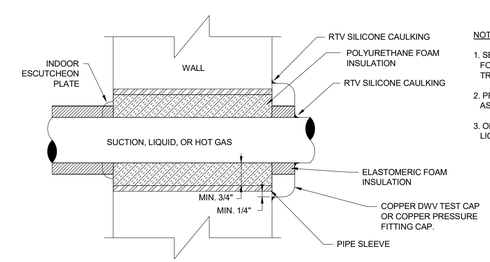

NOTES:
1. SEAL OPENING WITH POLYURETHANE FOAM. EQUAL TO VERSI-FOAM TRIM OFF EXCESS FOAM.
2. PROVIDE INTERMEDIATE SUPPORTS AS REQUIRED.
3. OMIT ELASTOMERIC INSULATION ON LIQUID LINE.

3 / M2.01 REFRIGERANT LINE - WALL PENETRATION DETAIL
NO SCALE

Pinnacle ENGINEERING, INC.
Engineering & Design Consultants
2111 Parkway Office Circle, Suite 125
Birmingham, AL 35244
(205) 733-6912 FAX: (205) 733-6913
Job No.24207

AHO ARCHITECTS
a sole proprietorship
www.ahoarch.com

STATE OF KENTUCKY JEFFREY BOYER 40070 LICENSED PROFESSIONAL ENGINEER
10/4/24

Express Oil Change & Tire Engineers

Single Building / Right Hand Oil Change / Front Enter / Side Tire Storage

Morehead, Kentucky

FINAL

No.	Description	Date

© 2024 Aho Architects, LLC. All Rights Reserved.

Mechanical Details

Project number	24029
Date	10/04/2024
Drawn by	CA
Checked by	JB

M2.01

Scale 12" = 1'-0"

10/7/2024 10:32:38 AM

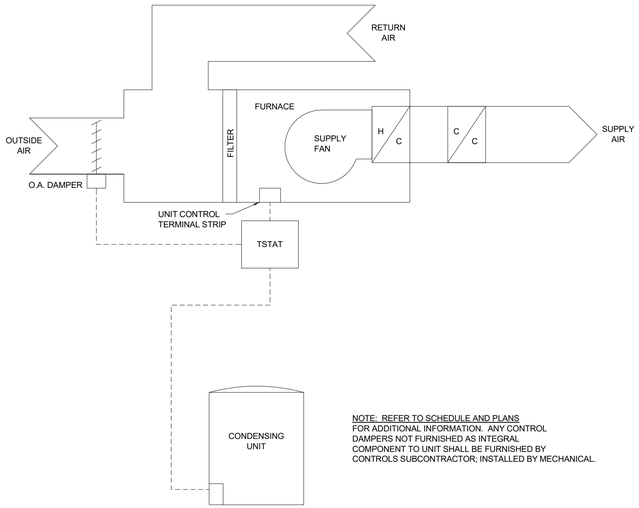

NOTE: REFER TO SCHEDULE AND PLANS FOR ADDITIONAL INFORMATION. ANY CONTROL DAMPERS NOT FURNISHED AS INTEGRAL COMPONENT TO UNIT SHALL BE FURNISHED BY CONTROLS SUBCONTRACTOR; INSTALLED BY MECHANICAL.

5 / M2.02 HVAC CONTROL DIAGRAM
TYPICAL
NO SCALE

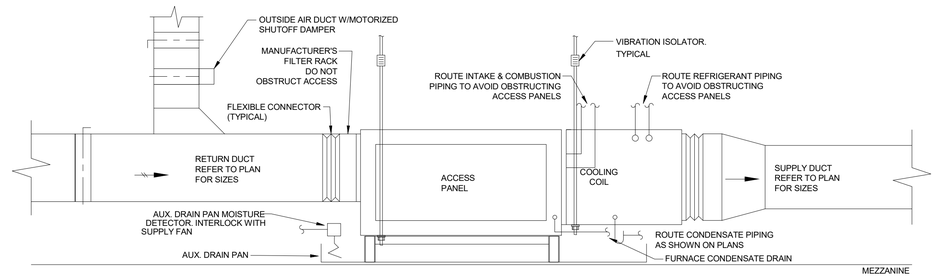

3 / M2.02 FURNACE AND COOLING COIL UNIT DETAIL
NO SCALE

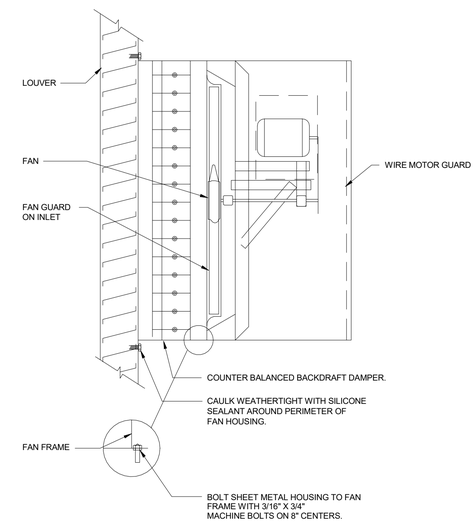

1 / M2.02 WALL EXHAUST FAN OR SUPPLY DETAIL
NO SCALE

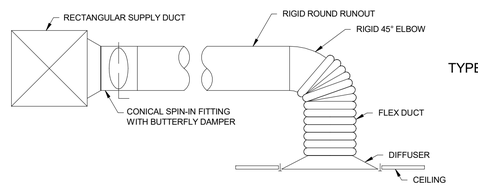

TYPE 1

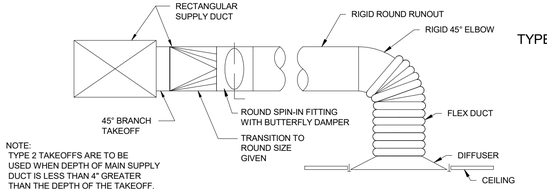

TYPE 2

NOTE:
TYPE 2 TAKEOFFS ARE TO BE USED WHEN DEPTH OF MAIN SUPPLY DUCT IS LESS THAN 4" GREATER THAN THE DEPTH OF THE TAKEOFF.

6 / M2.02 TYPICAL DIFFUSER RUN-OUT DETAIL
NO SCALE

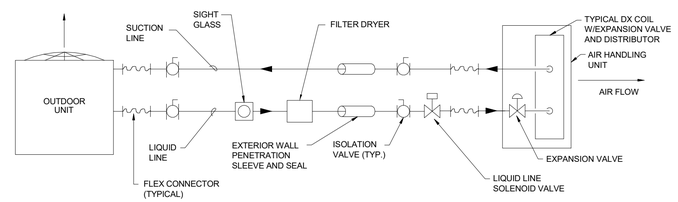

NOTE: SCHEMATIC IS TYPICAL FOR EACH REFRIGERANT CIRCUIT.

4 / M2.02 REFRIGERANT PIPING DETAIL
NO SCALE

GENERAL VENT REQUIREMENTS

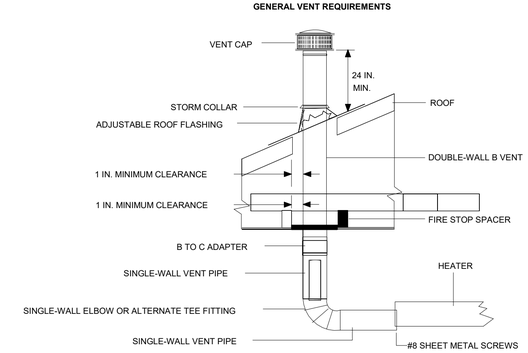

2 / M2.02 RADIANT HEATER VENTING DETAILS
NO SCALE

Pinnacle ENGINEERING, INC.
Engineering & Design Consultants
2111 Parkway Office Circle, Suite 125
Birmingham, AL 35244
(205) 733-6912 FAX: (205) 733-6913
Job No.24207

AHO ARCHITECTS
a sole proprietorship
www.ahoarch.com

STATE OF KENTUCKY
JEFFREY BOYER
40070
PROFESSIONAL ENGINEER
10/4/24

Express Oil Change & Tire Engineers

Single Building / Right Hand Oil Change / Front Enter / Side Tire Storage

Morehead, Kentucky

FINAL

No.	Description	Date

© 2024 Aho Architects, LLC.
All Rights Reserved.

Mechanical Details

Project number	24029
Date	10/04/2024
Drawn by	CA
Checked by	JB

M2.02

Scale 12" = 1'-0"

10/7/2024 10:32:38 AM

PLUMBING LEGEND, SYMBOLS AND ABBREVIATIONS

	DOMESTIC COLD WATER
	DOMESTIC HOT WATER
	DOMESTIC HOT WATER RETURN
	SANITARY VENT
	SANITARY WASTE

	BALL VALVE
	VALVE IN VERTICAL
	CAP ON END OF PIPE
CO	CLEANOUT - FLOOR TYPE
CO	CLEANOUT - WALL TYPE
	P-TRAP
	PIPE TURNING DOWN
	PIPE TURNING UP
	TEE DOWN
	TEE UP
	TIE NEW INTO EXISTING
P-1	PLUMBING FIXTURE NUMBER
XX	RISER NUMBER
	WATER HAMMER ARRESTOR
	PLUG TYPE CLEANOUT
	BALANCING VALVE
	CHECK VALVE
	GATE VALVE
	REDUCED PRESSURE ZONE BFP
	THERMOSTATIC MIXING VALVE
	FLOOR SINK
	FLOOR DRAIN
	ROOF DRAIN/OVERFLOW DRAIN
XX	FOOD SERVICE EQUIPMENT

ABV	ABOVE
AFF	ABOVE FINISHED FLOOR
INV	INVERT
BFF	BELOW FINISHED FLOOR
CW	COLD WATER
DN	DOWN
EX	EXISTING
HW	HOT WATER
WS	WASTE STACK
VS	VENT STACK
AC	ABOVE CEILING
WHA	WATER HAMMER ARRESTOR
BFG	BELOW FINISHED GRADE
TMV	THERMOSTATIC MIXING VALVE
TP	TRAP PRIMER
DS	DOWNSPOUT
UG	UNDER GROUND

PLUMBING FIXTURE CONNECTION SCHEDULE

EQUIPMENT NO.	DESCRIPTION	HOT WATER	COLD WATER	WASTE	VENT	REMARKS
WC-1	WATER CLOSET, ADA COMPLIANT	--	1/2"	4"	2"	PRESSURE ASSIST TANK TYPE
EW-1	EYEWASH	1/2"	1/2"	2"	1-1/2"	PROVIDE WITH MIXING VALVE
EWC-1	ELECTRIC WATER COOLER	--	1/2"	2"	1-1/2"	WALL MOUNT ADA WITH BOTTLE FILLER
LAV-1	LAVATORY, ADA COMPLIANT	1/2"	1/2"	1-1/2"	1-1/2"	WALL MOUNTED, PROVIDE TRAP WRAP AND MIXING VALVE
SK-1	SERVICE SINK	1/2"	1/2"	2"	1-1/2"	ROUTE TO INTERCEPTOR
WH-1	WALL HYDRANT	--	1/2"	--	--	
HD-1	HUB DRAIN	--	--	2"	1-1/2"	PROVIDE TRAP GUARD

ELECTRIC WATER HEATER SCHEDULE

EQUIPMENT NO.	MANUFACTURER AND MODEL NO.	SERVICE	EFF (%)	ENTERING WATER TEMP (°F)	LEAVING WATER TEMP (°F)	RECOVERY RATE (GPH)	STORAGE CAPACITY (GAL)	TANK DIMENSIONS		ELECTRICAL			REMARKS
								HEIGHT (INCHES)	DIAMETER (INCHES)	HEATING ELEMENTS		VOLTS/PH/HZ	
										WATTAGE	QNTY		
EWH-1	A.O. SMITH ECS-30X	BATHROOMS/EYEWASH	--	60	120	21	30	3'-3"	1'-8"	4.5 KW	1	208 / 1 / 60	

RECIRCULATION PUMP SCHEDULE

EQUIPMENT NO.	MANUFACTURER/ MODEL NO.	SERVICE	TYPE	FLOW (GPM)	HEAD (FT.)	RPM	ELECTRICAL			REMARKS
							HP	DISCONNECT	VOLTS/PH./HZ.	
REC-1	TACO 2400-10S	HOT WATER RETURN	INLINE	2	10	3450	1/10	BY DIV. 16	120/1/60	1)

REMARKS:
1) PROVIDE AQUASTAT AND TIMER. INSTALL IN ACCORDANCE WITH IECC REQUIREMENTS.
2) PUMP SHALL BE STAINLESS STEEL BODY FOR DOMESTIC USE.

GREASE INTERCEPTOR SCHEDULE

EQUIPMENT NO.	MANUFACTURER/ MODEL NO.	FLOW RATE (GPM)	LIQUID HOLDING CAPACITY (GAL)	CONNECTION SIZES		UNIT DIMENSIONS			REMARKS
				INLET (IN.)	OUTLET (IN.)	LENGTH (IN.)	WIDTH (IN.)	DEPTH (IN.)	
OS-1	STRIEM OS-25	25	21	3	3	2'-3"	1'-11"	1'-3"	1)

REMARKS:
1) PROVIDE EXTENSION TO MATCH GRADE.

SANITARY SYSTEM SUMMARY

TOTAL LOAD (FIXTURE UNITS)	GPM
12.5	14

WATER METER SUMMARY

TOTAL LOAD (FIXTURE UNITS)	GPM
16	18

Pinnacle ENGINEERING, INC.
Engineering & Design Consultants
2111 Parkway Office Circle, Suite 125
Birmingham, AL 35244
(205) 733-6912 FAX: (205) 733-6913
Job No.24207

AHO ARCHITECTS
a sole proprietorship
www.ahoarch.com

STATE OF KENTUCKY
JEFFREY BOYER
40070
LICENSED PROFESSIONAL ENGINEER
10/4/24

Express Oil Change & Tire Engineers
Single Building / Right Hand Oil Change / Front Enter / Side Tire Storage
Morehead, Kentucky

FINAL

No.	Description	Date

© 2024 Aho Architects, LLC.
All Rights Reserved.

Plumbing Legend, Abbreviations, and Schedules

Project number	24029
Date	10/04/2024
Drawn by	CA
Checked by	JB

P0.01

Scale 12" = 1'-0"

10/7/2024 10:32:38 AM

SECTION 15011 - PLUMBING GENERAL

A. PROVIDE EQUIPMENT, LABOR, MATERIAL, ETC., REQUIRED TO MAKE A COMPLETE WORKING INSTALLATION.
B. INSTALL THE WORK IN ACCORDANCE WITH DRAWINGS, SPECIFICATIONS AND THE STANDARDS AND CODES (LATEST EDITION) THAT APPLY TO THIS WORK. IN THE EVENT OF A CONFLICT, INSTALL WORK IN ACCORDANCE WITH THE MOST STRINGENT CODE REQUIREMENTS DETERMINED BY THE ENGINEER.
C. OBTAIN AND PAY FOR ALL PERMITS AND INSPECTIONS INCLUDING: BUILDING PERMITS, HEALTH DEPARTMENT PERMITS AND SEWER TAP PERMITS. DELIVER TO ENGINEER CERTIFICATES OF INSPECTION AND APPROVAL ISSUED BY AUTHORITIES.
D. ALL EQUIPMENT AND METHOD SHALL BE INSTALLED AND CONNECTED IN ACCORDANCE WITH THE BEST ENGINEERING PRACTICES AND IN ACCORDANCE WITH THE MANUFACTURER'S RECOMMENDATIONS.
E. DISCONNECT, REMOVE AND RE-INSTALL PLUMBING SERVICES LOCATED ON OR CROSSING THROUGH CONTRACT LIMITS, ABOVE OR BELOW GRADE, OBSTRUCTING CONSTRUCTION OF PROJECT OR CONFLICTING WITH COMPLETED PROJECT OR ANY APPLICABLE CODES.
F. PROVIDE CUTTING OF PAVEMENT, SIDEWALKS, DRIVEWAYS, ETC., EXCAVATING, TRENCHING, SHORING AND DE-WATERING. PROVIDE BACKFILL MATERIAL AND PERFORM BACKFILLING.
G. RESTORE SITE TO ORIGINAL CONDITION OR NEW FINAL GRADES. PROVIDE PAVING, CONCRETE, SEED, OR SOD.
H. DRAWINGS AND SPECIFICATIONS ARE COMPLEMENTARY. WORK CALLED FOR BY ONE IS BINDING AS IF CALLED FOR BY BOTH.
I. DRAWINGS ARE DRAWN TO A SMALL SCALE AND ARE DIAGRAMMATIC ONLY. THE DRAWINGS INDICATE SIZE AND GENERAL ARRANGEMENT OF EQUIPMENT. DO NOT SCALE DRAWINGS FOR EXACT LOCATIONS. FIELD MEASUREMENTS TAKE PRECEDENCE.
J. PROVIDE NECESSARY OFFSETS, ELBOWS AND FITTINGS AS REQUIRED TO AVOID CONFLICT WITH EQUIPMENT OF OTHER DIVISIONS AND TO OBTAIN PROPER HEADROOM AND CLEAR PASSAGEWAYS. THIS SHALL BE DONE AT NO ADDITIONAL COST TO THE OWNER.
K. WORK UNDER THIS DIVISION SHALL BE FIRST CLASS WITH EMPHASIS ON NEATNESS AND WORKMANSHIP. INSTALL WORK USING COMPETENT MECHANICS, UNDER SUPERVISION OF FOREMAN, ALL DULY CERTIFIED BY LOCAL AUTHORITIES.
L. INSTALLATION SUBJECT TO ENGINEER'SOBSERVATION, FINAL APPROVAL, AND ACCEPTANCE. ENGINEER MAY REJECT UNSUITABLE WORK.
M. ALL MATERIALS SHALL BE NEW. ALL MATERIALS AND EQUIPMENT FOR WHICH A UL STANDARD, AN AGA APPROVAL, AN AWWA STANDARD, FM LISTING OR ASME REQUIREMENTS IS ESTABLISHED, SHALL BE SO APPROVED AND LABELED OR STAMPED.
N. THE DRAWINGS ARE BASED ON THE USE OF PRODUCTS SPECIFIED AND LISTED FIRST. IF ANY REVISION IN PIPING, CONDUIT WORK, FOUNDATIONS, ANCHOR BOLTS, CONNECTIONS, ETC., IS REQUIRED BY OTHER NAMED PRODUCTS OR APPROVED SUBSTITUTIONS, IT SHALL BE THE CONTRACTOR'S RESPONSIBILITY TO MAKE SUCH REVISIONS AT NO ADDITIONAL EXPENSE TO THE OWNER.
O. SUBMIT SIX (6) ORIGINAL COPIES OF COMPLETE SHOP DRAWINGS FOR ALL MATERIALS AND EQUIPMENT FURNISHED UNDER DIVISION 15 OF SPECIFICATIONS TO ENGINEER FOR REVIEW. SHOP DRAWINGS SHALL BEAR THE STAMP OF APPROVAL OF THE CONTRACTOR AS EVIDENCE THAT THE DRAWINGS HAVE BEEN CHECKED BY HIM. DRAWING SUBMITTED WITHOUT THIS STAMP OF APPROVAL WILL NOT BE CONSIDERED AND WILL BE RETURNED FOR PROPER RESUBMISSION.
P. REVIEW OF SHOP DRAWINGS DOES NOT RELIEVE CONTRACTOR OF RESPONSIBILITY FOR ERRORS AND OMISSIONS IN SHOP DRAWINGS. CONTRACTOR IS RESPONSIBLE FOR DIMENSIONS AND SIZES OF EQUIPMENT. INFORM ENGINEER IN WRITING OF EQUIPMENT DIFFERING FROM THAT SHOWN.
Q. PROVIDE MAINTENANCE AND OPERATING MANUALS BOUND IN 8-1/2" X 11" HARDBACK, THREE-POST BINDERS. MANUALS SHALL CONTAIN WRITTEN INSTRUCTIONS FOR EACH SYSTEM, SHOP DRAWINGS, SCHEMATIC DRAWINGS, EQUIPMENT CATALOG CUTS, MANUFACTURER'S INSTRUCTIONS, MANUFACTURERS WARRANTIES, AND VALVE TAG LIST.
R. PROVIDE AS-BUILT PRINTS AT THE COMPLETION OF JOB. KEEP ONE SET OF PRINTS ON JOB AND RECORD DAY TO DAY CHANGES TO CONTRACT DRAWINGS WITH RED PENCIL. INDICATE ACTUAL LOCATION OF PIPING, VALVES, AND EQUIPMENT. TURN OVER PRINTS TO ENGINEER AT FINAL OBSERVATION.
S. FURNISH ENGINEER WRITTEN WARRANTY, STATING THAT IF WORKMANSHIP AND/OR MATERIALS EXECUTED UNDER THIS DIVISION IS PROVEN DEFECTIVE WITHIN ONE (1) YEAR AFTER FINAL ACCEPTANCE, SUCH DEFECTS AND OTHER WORK DAMAGED WILL BE REPAIRED AND/OR REPLACED.

SECTION 15051 - BASIC MATERIALS AND METHODS

A. ACCESS PANELS:
   1. ACCESS PANELS SHALL HAVE WELDED STEEL FRAME, ONE PIECE DOORS, AND SELF LATCHING DOOR LOCKS. LOCKS SHALL BE SCREW DRIVER OPERATED WITH CASE HARDENED STEEL CAM. PANELS SHALL BE MILCOR, CESCO, KARP OR EQUAL.
   2. PROVIDE ACCESS PANELS IN WALLS AND CEILINGS AS NEEDED TO ALLOW ACCESS TO VALVES, EQUIPMENT, SHOCK ABSORBERS, TRAP PRIMERS, ETC. AND WHERE NOTED.
B. FIRESTOPPING AND SOUNDSTOPPING:
   1. PENETRATIONS THROUGH FLOORS AND FIRE RESISTANT WALLS SHALL BE SEALED TO THE RATED FIRE RESISTANCE EQUAL TO THE WALL. INSTALLATION SHALL BE DONE BY A QUALIFIED INSTALLER, APPROVED BY THE MANUFACTURER.
   2. PROVIDE SOUND PROOFING THROUGH NON-RATED WALLS.
C. PIPING SEALS:
   1. PROVIDE MODULAR, RESILIENT SEALS AROUND PIPES PENETRATING ALL EXTERIOR WALLS, AND FLOORS BELOW GRADE. PIPING SEALS SHALL BE THUNDERLINE CORP. "LINK SEAL" LS SERIES.
D. CUTTING AND PATCHING:
   1. CONTRACTOR SHALL BE RESPONSIBLE FOR CUTTING AND PATCHING. CUT WALLS, FLOORS, CEILINGS, PARTITIONS, ETC., REQUIRED FOR THE INSTALLATION OF THIS WORK IN A NEAT AND CAREFUL MANNER. CORE DRILL FOR PIPE SLEEVES AND OTHER OPENINGS THROUGH FLOORS AND WALLS. SAWCUT LARGER OPENINGS. CUTTING SHALL BE KEPT TO A MINIMUM.

   2. REPLACE OR REPAIR DUCTWORK, CONDUIT, PIPING, ETC., THAT IS CUT. PATCH AROUND OPENING CUT BY THIS CONTRACTOR OR PROVIDED BY OTHERS FOR HIM. PATCHING SHALL BE DONE BY AN APPROVED QUALIFIED CONTRACTOR, BUT SHALL BE PAID FOR BY THIS CONTRACTOR. FINISHED PATCHING SHALL RETAIN FIRE AND SMOKE RATINGS OF THE ASSEMBLY AND SHALL MATCH SURROUNDING FINISH.
E. ANCHORS:
   1. MOUNT ALL EQUIPMENT, BRACKETS, HANGERS, ANCHORS, ETC. TO SAFELY RESIST THE VIBRATION OR THRUST FORCES AND SUPPORT THE UNIT'S WEIGHT.
   2. FLOOR MOUNTED ROTATING OR VIBRATING EQUIPMENT SHALL BE ANCHORED TO THE FLOOR USING GROUTED-IN-PLACE OR CAST-IN-PLACE ANCHOR BOLTS WITH THREE INCH HOOK AND SLEEVE. ANCHOR BOLTS SHALL BE OF THE SIZE RECOMMENDED BY THE MANUFACTURER.
   3. FLOOR MOUNTED STATIC ITEMS, WALL AND CEILING MOUNTED EQUIPMENT BRACKET AND HANGERS SHALL BE INSTALLED USING DRILLED ANCHORS ![OR CAST IN PLACE INSERTS]. ANCHORS SHALL BE PHILLIPS DRILL COMPANY "RED HEAD" OR MULTI-SET II. SIZE ANCHORS ![AND INSERTS] FOR FOUR TIMES THE APPLIED LOAD. BOLTS USED OUTDOORS OR IN A WET ENVIRONMENT SHALL BE HOT DIP GALVANIZED.
A. PIPE IDENTIFICATION:
   1. IDENTIFICATION SHALL BE IN ACCORDANCE WITH ANSI-A13.1. PIPE MARKERS SHALL BE SETON'S WEATHER-CODE OR EQUAL.
   2. PROVIDE PIPE MARKERS AND DIRECTIONAL ARROWS ON PIPES AT BOTH SIDES OF PARTITIONS AND FLOORS SLABS, AT BRANCH LINE TAKE-OFFS, AT VALVES, AT INTERMEDIATE INTERVALS NOT IN EXCESS OF 20 FT. AND AT CONNECTIONS TO EQUIPMENT.
   3. TAPE COLOR BAND IDENTIFYING MARKERS AND ARROWS ON EACH PIPE, BOTH INSULATED AND BARE PIPES. PIPE MARKERS AND ARROWS SHALL BE LOCATED WHERE READILY VISIBLE AND ON LOWER QUADRANTS OF OVERHEAD PIPES.
B. VALVE TAG AND CHART:

   1. VALVE TAGS SHALL BE SETON M4506, BLACK FILLED LETTERS WITH BRASS JACK CHAIN. ONE VALVE NUMBER SHALL BE STAMPED ON EACH TAG. IDENTIFY EACH VALVE TAG FOR THE UTILITY IT SERVES, SUCH AS "CW" FOR COLD WATER, HW FOR HOT WATER, ETC. VALVE CHARTS SHALL BE SETON. ATTACH A NUMBERED VALVE TAG TO EACH VALVE.
   2. PROVIDE A TYPE WRITTEN CHART IN FRAME UNDER GLASS COVER, GIVING THE FULL LIST OF ALL VALVES INSTALLED UNDER THIS CONTRACT. CHART SHALL LIST VALVE NUMBER, TYPE OF UTILITY, AND LOCATION. MOUNT CHART WHERE DIRECTED BY OWNER. PROVIDE ONE ADDITIONAL COPY TO OWNER.
A. EQUIPMENT IDENTIFICATION:
   1. IDENTIFY EACH PIECE OF EQUIPMENT WITH A 1/8 INCH THICK ENGRAVED MELAMINE PLASTIC LAMINATE NAMEPLATE. LETTERS SHALL BE 1/2 INCH HIGH STANDARD STYLE. NAMES, ABBREVIATIONS, AND NUMBERING SHALL AGREE WITH THE CORRESPONDING EQUIPMENT DESIGNATIONS SHOWN ON THE DRAWINGS. USE BLACK LETTERS CUT IN A WHITE BACKGROUND FOR ALL EQUIPMENT ON STANDARD ELECTRICAL POWER
   2. FASTEN NAMEPLATES TO EQUIPMENT IN A CONSPICUOUS LOCATION USING SELF-TAPPING STAINLESS STEEL SCREWS, EXCEPT USE CONTACT EPOXY ADHESIVE WHERE SCREWS CANNOT OR SHOULD NOT PENETRATE SUBSTRATE.
B. PIPE SLEEVES:
   1. PROVIDE PIPE SLEEVES WHERE PIPES PASS THROUGH FLOORS AND WALLS ABOVE OR BELOW CEILINGS. PROVIDE PIPE SLEEVES IN NEW WALLS AND FLOORS AS THE WORK PROGRESSES. PROVIDE SPLIT PIPE SLEEVES IN NEW WALLS BUILT UP AROUND EXISTING PIPES. TACK WELD SPLIT SLEEVES TOGETHER.
   2. SIZE PIPE SLEEVES TO ALLOW CONTINUOUS INSULATION, BUT NOT LESS THAN TWO PIPE SIZES LARGER THAN PIPE. SLEEVES IN WALLS SHALL BE FLUSH WITH WALL, SLEEVES IN FLOORS SHALL EXTEND 3/4 INCHES ABOVE FLOOR AND BE FLUSH WITH STRUCTURE BELOW.
   3. SLEEVES IN CONCRETE WALLS, FLOORS OR MASONRY SHALL BE SCH 40 STEEL PIPE, MACHINE CUT. SLEEVES IN GYPSUM BOARD OR PLASTER WALLS SHALL BE 14 GAUGE, ROLLED GALVANIZED SHEET METAL TACK WELDED ON THE LONGITUDINAL SEAM.
   4. PROVIDE PLATES AROUND PIPES EXTENDING INTO EXPOSED AREAS WHERE THEY PASS THROUGH WALLS, FLOORS AND CEILINGS. SIZE PLATES TO COMPLETELY COVER PIPE SLEEVES. PLATES SHALL BE BEATON AND CADWELL, KEENEY OR GRINNELL, NICKEL PLATED STEEL, SPLIT PLATES WITH SET SCREW. CONCRETE FLOOR PLATE SHALL BE GRINNELL FIGURE 400.
C. FLASHING:
   1. PROVIDE FLASHING AT PIPING AND DUCT PENETRATIONS THROUGH ROOF AND ROOF MOUNTED STRUCTURES FURNISHED UNDER THIS DIVISION. FLASH IN ACCORDANCE WITH ROOFING MANUFACTURERS DETAILS. FLASHING MATERIALS SHALL BE IN ACCORDANCE WITH THE ROOFING MANUFACTURERS SYSTEM.
   2. PROVIDE FLASHING AT PIPES PASSING THROUGH FLOORS WITH WATERPROOF MEMBRANE. FLASHING SHALL BE IN ACCORDANCE WITH WATERPROOFING MANUFACTURER'S DETAILS.

SECTION 15261 - PLUMBING INSULATION

A. GENERAL:
1. ALL INSULATION, JACKETING, AND ADHESIVE SHALL HAVE COMPOSITE SURFACE BURNING CHARACTERISTIC RATING AS TESTED BY ASTM E 84, UL 723, OR NFPA 255 NOT EXCEEDING A FLAME SPREAD OF 25 OR SMOKE DEVELOPED OF 50.
2. SUBMITTALS SHALL USE PAGES FROM MIDWEST INSULATION CONTRACTORS ASSOCIATION – “COMMERCIAL AND INDUSTRIAL INSULATION STANDARDS” FOR DEFINING HOW INSULATION MATERIALS WILL BE APPLIED.
3. ALL PIPE INSULATION SHALL BE CONTINUOUS THROUGH WALLS, CEILING OR FLOOR OPENINGS, OR SLEEVES; EXCEPT WHERE FIRESTOP OR FIRESAFING MATERIALS ARE REQUIRED.
4. INSULATE ITEMS MOUNTED IN PIPING WITH THE SAME THICKNESS OF INSULATION AS SPECIFIED FOR PIPING.
5. REPAIR INSULATION DAMAGED BY WORK UNDER THIS CONTRACT TO MATCH EXISTING WORK OR REPLACE DAMAGED PORTION WITH INSULATION SPECIFIED FOR NEW WORK.
B. DOMESTIC WATER PIPING:
1. INSULATION SHALL BE 850 DEG. F RATED AS MANUFACTURED BY OWENS CORNING, MANVILLE OR KNAUF. ROUTED OR MOLDED FITTING INSULATION SHALL BE HAMFAB.
2. INSULATION SHALL HAVE FACTORY-APPLIED, REINFORCED, FLAME RETARDANT, VAPOR BARRIER JACKET EQUAL TO OWENS-CORNING ASJ WITH SELF-SEALING LAP. BUTT JOINTS SHALL BE TAPED WITH FIELD-APPLIED ASJ TAPE 3 IN. WIDE.
3. INSULATION THICKNESSES SHALL BE IN ACCORDANCE WITH INTERNATIONAL ENERGY CONSERVATION CODE FOR PIPE SIZES NOTED ON PLAN.
4. ALL FITTINGS AND VALVES SHALL BE INSULATED WITH PREFORMED FIBER GLASS FITTINGS OR MITERED SECTIONS OF PIPE INSULATION. INSULATION SHALL BE OF EQUAL THICKNESS TO THE ADJACENT PIPE INSULATION.
5. METAL SHIELDS SHALL BE INSTALLED BETWEEN HANGERS OR SUPPORTS AND THE PIPING INSULATION. RIGID INSULATION INSERTS SHALL BE INSTALLED AS REQUIRED BETWEEN THE PIPE AND THE INSULATION SHIELDS. INSERTS SHALL BE OF EQUAL THICKNESS TO THE ADJACENT INSULATION AND SHALL BE VAPOR SEALED AS REQUIRED.
C. ELASTOMERIC CLOSED CELL INSULATION:
1. INSULATION SHALL BE RUBATEX OR ARMSTRONG. SECURE INSULATION WITH CONTACT ADHESIVE IN ACCORDANCE WITH MANUFACTURERS INSTRUCTIONS. EXPOSED OR EXTERIOR INSTALLATIONS SHALL BE PAINTED WITH TWO COATS OF WATER BASE LATEX ENAMEL.
2. PROVIDE 1 IN. THICK INSULATION ON DX REFRIGERANT PIPING, COOLING COIL CONDENATE PIPING, AND CAPS FOR ALL VALVE STEMS AND OPERATORS, GAUGE COCKS, THERMOMETER WELLS AND OTHER APPURTENANCES SUBJECT TO SWEATING.
D. PIPING FINISHES:
1. METAL JACKETING SHALL BE, SMOOTH .016 IN. THICK, TYPE T 3003 ALUMINUM WITH LAMINATED MOISTURE BARRIER. JACKETING SHALL BE CHILDERS, ALUMINUM ROLL JACKETING WITH POLYKRAFT MOISTURE BARRIER. COVER THE FOLLOWING INSULATED SYSTEMS WITH METAL JACKETING: PIPING INSTALLED OUTDOORS AND EXPOSED PIPING INDOORS WITHIN 8 FT. OF FINISHED FLOOR. METAL FITTING COVERS SHALL BE TWO PIECE ALUMINUM. COVERS SHALL BE ELL-JAC.
2. CONCEALED PIPING FINISH COVERING SHALL BE THE ALL SERVICE JACKET. FITTINGS SHALL BE COVERED BY WRAPPING THE FITTING WITH FIBER REINFORCED TAPE, WITH A 5 PERCENT OVERLAP. FITTING COVERS SHALL BE ONE PIECE 20 MIL PVC. COVERS SHALL BE CEEL-TITE 550 PVC-UVR BY CEEL-CO OR EQUALS.

SECTION 15410 - PLUMBING PIPING

A. THE WORK REQUIRED UNDER THIS SECTION INCLUDES ALL WORK NECESSARY FOR A COMPLETE INSTALLATION OF SANITARY WASTE PIPING, STORM PIPING AND DOMESTIC WATER PIPING INSIDE THE BUILDING TO 5 FEET OUTSIDE THE BUILDING. SUBMIT SCHEDULE OF PIPE AND FITTINGS FOR EACH SERVICE.
B. DOMESTIC WATER PIPING: WATER PIPING WITHIN THE BUILDING SHALL BE COPPER TUBE, TYPE "L" HARD TEMPER, ASTM B-88. PIPING BELOW GROUND SHALL BE COPPER TUBE, TYPE “K” SOFT TEMPER, ASTM B-88. FITTINGS SHALL BE WROUGHT COPPER, SOLDER TYPE, ASTM B-75, ANSI B16.22. SOLDER UNIONS SHALL BE WROT COPPER, WITH COPPER GROUND JOINT. ASTM B75, ANSI B16.22. DI-ELECTRIC, EPSO, 250 LB. WOG. SOLDER METAL SHALL CONFORM TO ASTM B32, LEAD-FREE.
C. STORM, SANITARY WASTE, AND VENT PIPING: ABOVE GROUND: SCHEDULE 40 PVC-DWV ASTM D-2665 USING SOLVENT CEMENT ASTM D02565. HORIZONTAL PIPING FOR FIXTURE ROUGH-INS MAY BE DWV COPPER, ASTM B-306. BELOW GROUND: SCHEDULE 40 PVC-DWV ASTM D-2665 USING SOLVENT CEMENT ASTM D-2564.
D. STORM, SANITARY WASTE AND VENT FITTINGS: ABOVE GROUND: ![NO HUB CAST IRON SOIL PIPE FITTINGS WITH COUPLING ASSEMBLY CISPI STANDARD 310.] SCHEDULE 40 PVC-DWV, ASTM D-2855 USING SOLVENT CEMENT ASTM D-2564. BELOW GROUND: SCHEDULE 40 PVC-DWV, ASTM D-2855 USING SOLVENT CEMENT ASTM D-2564.
E. BALL VALVES: VALVES SHALL BE NIBCO T-585-70, FULL PORT BALL TYPE WITH BRONZE BODY, CHROME PLATED BALL AND BRONZE THREADED ENDS, 600 PSI WOG OR NIBCO S-585-70 IN COPPER LINES. HAMMOND, CRANE, APOLLO, MILWAUKEE, OR APPROVED EQUAL.
F. ALL PIPING SHALL BE ROUTED TO CONSERVE BUILDING SPACE, BE COORDINATED WITH ITEMS INSTALLED BY OTHER TRADES AND NOT INTERFERE WITH ACCESS TO OR OPERATION OF THE FACILITY.
G. PROVIDE ROOF FLASHINGS FOR PIPE PENETRATIONS THROUGH ROOF, TO BE INSTALLED BY ROOFING CONTRACTOR
H. WATER PIPING WITHIN BUILDING SHALL BE SIZE INDICATED ON PLANS AND RISERS. IN THE EVENT NO SIZE IS SHOWN, PIPE SIZE OR SIZE REQUIRED BY THE PLUMBING CODE. PIPING SHALL BE SLOPED TOWARD A SYSTEM DRAIN AND TOWARD OUTLETS, TO PROVIDE FOR SYSTEM DRAIN-DOWN. IF INSTALLED NEAR EXTERIOR WALLS, PIPING SHALL BE LOCATED ON THE INTERIOR SIDE OF INSULATION. INSTALL PIPING TO PREVENT DIRECT CONTACT BETWEEN FERROUS AND NON-FERROUS MATERIALS. ALLOW FLEXIBILITY FOR EXPANSION IN PIPING.
I. DOMESTIC WATER PIPING SYSTEM SHALL BE TESTED WITH POTABLE WATER AT A PRESSURE OF 125 PSIG OR 25 PSIG ABOVE DESIGN WORKING PRESSURE, WHICHEVER IS GREATER FOR 12 HOURS. TEST SHALL BE CONDUCTED WITH PLUMBING INSPECTOR UNLESS APPROVED OTHERWISE IN WRITING.
J. WATER DISTRIBUTION PIPING SHALL BE DISINFECTED PRIOR TO OCCUPANCY OR SYSTEM START-UP WITH A CHLORINE SOLUTION 50 PPM. ALLOW SYSTEM TO STAND FOR SIX HOURS MINIMUM, THEN EXERCISE ALL VALVES TO ENSURE TREATMENT OF ALL BRANCHES AND COMPONENTS. SYSTEM SHALL BE FLUSHED WITH POTABLE WATER AFTER DISINFECTION AND PRIOR TO PLACEMENT INTO SERVICE.
K. STORM, SANITARY WASTE AND VENT PIPING SHALL BE TESTED IN ACCORDANCE WITH WATER TEST AS SPECIFIED IN THE INTERNATIONAL PLUMBING CODE, IN ADDITION TO ANY TESTS REQUIRED BY THE LOCAL PLUMBING OFFICIAL. (10 FEET OF HEAD WITH NO APPARENT LEAKS. HOLD FOR 30 MINUTES MINIMUM). FLUSH ALL GRAVITY PIPING INCLUDING FLOOR DRAINS AND ROOF DRAINS PRIOR TO TURNING OVER TO THE OWNER.
L. ALL PIPE SHALL BE CUT SQUARE. REAM PIPE AND TUBE ENDS AND REMOVE BURRS. CLEAN THE ENDS OF PIPES TO REMOVE OIL, GREASE AND OXIDES. PREPARE PIPING CONNECTIONS TO EQUIPMENT WITH FLANGES OR UNIONS.
M. ALL SOLDERED PIPING AND EQUIPMENT CONNECTIONS SHALL BE PROPERLY PREPARED IN ACCORDANCE WITH GOOD PIPING PRACTICE. APPLY A THIN LAYER OF FLUX TO ONLY THE MALE TUBING. ROTATE INTO THE FITTING WITH ONE OR TWO REVOLUTIONS.
N. DOMESTIC WATER PIPING: ROUTE PIPING IN ORDERLY MANNER, PLUMB AND PARALLEL TO BUILDING STRUCTURE, AND MAINTAIN GRADIENT. INSTALL PIPING TO ALLOW FOR EXPANSION AND CONTRACTION WITHOUT STRESSING PIPE, JOINTS, OR CONNECTED EQUIPMENT. PROVIDE CLEARANCE FOR INSTALLATION OF INSULATION AND ACCESS TO VALVES AND FITTINGS. PROVIDE ACCESS WHERE VALVES AND FITTINGS ARE NOT EXPOSED. INSTALL VALVES WITH STEMS UPRIGHT OR HORIZONTAL. PROVIDE DRAIN VALVES AT LOW POINTS IN SYSTEMS. TEST WATER PIPING BEFORE BEING INSULATED OR CONCEALED IN WALLS OR CEILING.
O. STORM, SANITARY WASTE, AND VENT PIPING: HORIZONTAL SOIL, WASTE AND DRAINAGE LINES WITHIN BUILDING SHALL HAVE A MINIMUM UNIFORM SLOPE OF 1/8 INCH PER FOOT ON 3 INCH AND LARGER, AND 1/4 INCH PER FOOT ON LINES 2 INCH AND SMALLER. TURNS IN SANITARY, SOIL, AND DRAIN PIPING SHALL BE MADE USING 45 DEGREE ELBOWS, WYES, QUARTER, EIGHTH, SIXTEENTH BENDS, OR OTHER BENDS APPROVED BY THE PLUMBING CODE. DO NOT USE SANITARY TEES OR CROSSES EXCEPT WHERE DISCHARGING FROM HORIZONTAL TO VERTICAL. MAKE CHANGES IN PIPE SIZES WITH REDUCING FITTINGS AND RECESSED REDUCERS. DO NOT REDUCE LINE SIZE IN DIRECTION OF FLOW. PROVIDE CLEANOUTS IN ALL HORIZONTAL TURNS IN WASTE PIPING GREATER THAN 45 DEGREES. PROVIDE DEEP SEAL TRAPS ON ALL FLOOR DRAINS, AND TRAP PRIMERS/SEAL WHERE REQUIRED BY CODE OR AS INDICATED ON DRAWINGS. INDIRECT WASTE LINES DUMPING INTO FLOOR OR HUB DRAINS SHALL MAINTAIN A 2-INCH AIR GAP BETWEEN THE END OF THE WASTE LINE AND THE RIM OF THE FLOOR OR HUB DRAIN.

SECTION 15416 - GAS PIPING SYSTEMS

A. PROVIDE COMPLETE INSTALLATION OF GAS PIPING FROM THE “POINT OF DELIVERY” UP TO AND INCLUDING CONNECTION TO ALL GAS-FIRED EQUIPMENT. CONNECT EQUIPMENT ITEMS FURNISHED UNDER OTHER SECTIONS OF SPECIFICATIONS. TEST IN ACCORDANCE WITH A.G.A., STANDARD GAS CODE, N.F.P.A. 54, AND APPLICABLE STATE AND LOCAL CODES.
B. ROUTE GAS SERVICE ENTRANCE PIPING INTO BUILDING TO AVOID INTERFERENCE AND DAMAGE. PROVIDE MANUAL SHUTOFF VALVE, GAS COCK AND GAUGE. VALVES SHALL BE LABELED.
C. PROVIDE ACCESS PANELS FOR VALVES AND OTHER ITEMS REQUIRING MAINTENANCE IN ENCLOSED SPACES. AVOID INSTALLING GAS APPURTENANCES IN ENCLOSED SPACES WHERE POSSIBLE. INSTALL IN ENCLOSED SPACES ONLY AS ALLOWED BY APPLICABLE CODES.
D. SUBMIT MANUFACTURER'S LITERATURE ON ALL MATERIALS AND EQUIPMENT INCLUDING: PIPE, PIPE COATING, ANODES, VALVES, FLEXIBLE CONNECTORS, FITTINGS, REGULATORS, RELIEF VALVES, GAUGES.
E. GAS SERVICE:
   1. COORDINATE INSTALLATION OF GAS SERVICE LINE WITH LOCAL GAS COMPANY. PAY ALL FEES.
   2. PROVIDE 12 INCH ELEVATED METER MOUNTING PADS ON TOP OF A 4 INCH THICK CONCRETE PAD FOR SUPPORT OF GAS METER AND PIPING.
   3. PROVIDE (TWO) 8 INCH DIAMETER PIPE BOLLARDS FOR GAS METER PROTECTION. BOLLARDS SHALL BE SIX FEET LONG (3 FEET BELOW GRADE), MOUNTED IN A 24 INCH DIAMETER HOLE, FILLED WITH 3,000 PSI CONCRETE.
F. INTERIOR PIPING: CONNECT TO ENTERING LINE AND DISTRIBUTE GAS TO EQUIPMENT ITEMS REQUIRING GAS AND AS INDICATED. PERFORM WORK IN ACCORD WITH APPLICABLE A.G.A., N.F.P.A. 54, STATE AND LOCAL CODES. INSTALL GAS STOP VALVES AND DRIP LEGS AT EACH EQUIPMENT ITEM. PIPING SHALL BE ADEQUATELY DRAINED WITH A MINIMUM SLOPE OF 1/4 INCH PER 15 FEET AND DRIP LEGS (FULL SIZE OF PIPE) INSTALLED AT ADDITIONAL POINTS WHERE CONDENSATE MAY COLLECT. INSTALL PRESSURE REDUCING VALVES AS REQUIRED TO PROVIDE PRESSURE WITHIN EQUIPMENT MANUFACTURER'S REQUIREMENTS.
G. EXTERIOR PIPING: EXTERIOR PIPING SHALL BE SCHEDULE 40 CARBON STEEL. PIPING 2 INCH AND SMALLER MAY USE THREADED FITTINGS. PIPING 2 2 INCH AND LARGER SHALL USE WELDED FITTINGS AND FLANGED VALVES. EXTERIOR PIPING SHALL BE COATED WITH AN ALKYD ENAMEL PRIMER (MINIMUM DRY THICKNESS 3 MILS). EXTERIOR PIPING SHALL BE SUPPORTED ON GALVANIZED B-LINE CHANNELS AND PIPE CLAMPS.
H. UNDERGROUND PIPING:
   1. UNDERGROUND PIPING SHALL BE CARBON STEEL - A53/A106-WELDED OR POLYETHYLENE. UNDERGROUND STEEL PIPING SHALL HAVE AT LEAST 18 INCH OF PROPER BACKFILL COVER.
   2. UNDERGROUND PIPING SHALL BE PROTECTED FROM CORROSION. PROVIDE COATED PIPING AND FITTINGS. REPAIR DAMAGED COATING AT WELDS. INSTALL SACRIFICIAL ANODES ON STEEL PIPING INTERVALS NOT EXCEEDING 100 FT.
   3. WHERE PIPES PENETRATE BASEMENT WALLS AND FOUNDATIONS INSTALL THUNDERLINE LINK SEAL.
   4. 1. GAS LINES ROUTED UNDER A BUILDING SHALL BE STEEL AND SHALL BE ENCASED IN A SCH 40 OUTER CONDUIT (AT LEAST 3 PIPE SIZES LARGER THAN THE GAS LINE). CONDUIT SHALL BE SEAL WELDED TO THE GAS PIPE INSIDE THE BUILDING. CONDUIT SHALL BE VENTED TO OUTDOORS. CONDUIT SHALL BE PROTECTED FROM CORROSION SIMILARLY TO UNDERGROUND PIPING.
I. PIPE/TUBING:
   1. STEEL PIPE: ASTM A53 GRADE A OR B, TYPE F, ERW OR SEAMLESS. SCHEDULE 40.
   2. ASTM A106 SEAMLESS. SCHEDULE 40.
   3. TUBING (STEEL) ASTM A539.
   4. PLASTIC PIPE ASTM D2513 POLYETHYLENE. DRISCO PIPE 6500 OR PRIOR APPROVED EQUAL.
J. FITTINGS:
   1. WELDED (STEEL): WELDING FITTINGS SHALL BE CARBON STEEL BUTT WELDING TYPE CONFORMING TO ASTM-234. ELBOWS SHALL BE LONG RADIUS TYPE. WELDING TEES SHALL BE USED ON BRANCH CONNECTIONS EQUAL TO OR GREATER THAN 2 THE DIAMETER OF THE MAIN RUN. FITTINGS SHALL BE LADISH, TUBE-TURN OR WELDBAND. CARBON STEEL REINFORCED BRANCH, WELDING FITTINGS UP TO 3 INCHES, BUT NOT GREATER THAN 2 THE DIAMETER OF THE MAIN RUN MAY BE USED. FITTINGS SHALL BE BONNEY FORGE OR PHOENIX FORGING.
   2. THREADED (MALLEABLE, IRON): SCREWED FITTINGS SHALL BE MALLEABLE IRON ASTM A-197 CLASS 150 CONFORMING TO ANSI B16.3. DIMENSIONS CONFORMING TO FEDERAL SPEC WW-P-521. FITTINGS SHALL BE GRINNELL, FLAGG OR STOCKHAM.
   3. HEAT FUSION/COMPRESSION (POLYETHYLENE): SOCKET TYPE FUSION SHALL MEET THE REQUIREMENTS OF ASTM 2683. FITTINGS SHALL BE LISTED AND MARKED ASTM D2513. BUTT TYPE FUSION FITTING SHALL MEET THE REQUIREMENTS OF ASTM D3261.
K. UNIONS (DIELECTRIC): CLASS 250 MALLEABLE, SCREWED ASTM A-197.
L. VALVES:
   1. 1 INCH AND SMALLER: BALL VALVE - CLASS 125 BRASS FULL PART, 2 PIECE BODY, CHROME PLATED BALL, BLOWOUT PROOF STEAM, TFE SEATS.
   2. 2 INCHES AND SMALLER: PLUG COCK - CLASS 125 CAST IRON, SCREWED, FULL PORT AGA LISTED. ANSI B16.33 HOMESTEAD FIGURE 601.
   3. 2 2 INCHES AND LARGER: PLUG VALVE - CLASS 125 FLANGED CAST IRON ASTM A126 CONFORMING TO ANSI B16.1.
M. PIPE COATING: X-TRU COAT OR PRIOR APPROVED EQUAL INCLUDING JOINTS AND FITTINGS.
N. PRESSURE REGULATORS: CAST IRON OR ALUMINUM BODY AND SPRING CASE WITH STAINLESS STEEL VALVE STEAM, SEAT RING AND VALVE PLUG, PLATED STEEL SPRINGS, NEOPRENE DIAPHRAGM AND GASKETS AND TFE DISC. REGULATING VALVES SHALL BE SIZED FOR THE FLOW INDICATED AND FOR INLET AND OUTLET PRESSURES INDICATED. OUTLET PRESSURE SHALL BE MAINTAINED UNDER THE DESIGN FLOW CONDITION AND AT NO FLOW. REGULATING VALVES TWO PSI AND BELOW SHALL HAVE LEAK LIMITING DEVICES. REGULATING VALVES OVER TWO PSI SHALL BE VENTED FULL SIZE TO OUTSIDE OF THE BUILDING. OTHER REGULATING VALVES REQUIRING ACCESS TO THE ATMOSPHERE SHALL BE EQUIPPED WITH VENT PIPING LEADING TO OUTSIDE. PROVIDE A PRESSURE RELIEF VALVE IF THE REGULATOR CONNECTION SIZE EXCEEDS TWO-INCHES. REGULATING VALVES SHALL BE FISHER, MAXITROL OR PRIOR APPROVED EQUAL MEETING ANSI Z21.18.
O. PRESSURE GAGE: FOR MEDIUM PRESSURE GAS; 0-5 PSI RANGE. FOR LOW PRESSURE GAS; 0-30 INCH W.C. RANGE. USE LOW PRESSURE TYPE 2-1/2 INCH DIAL PRESSURE GAGE WITH APPROPRIATE RANGE, OCI MODEL CO 34, TRERICE, WEKSLER OR APPROVED EQUAL.

Pinnacle ENGINEERING, INC
Engineering & Design Consultants
2111 Parkway Office Circle, Suite 125
Birmingham, AL 35244
(205) 733-6912 FAX: (205) 733-6913
Job No.24207

AHO ARCHITECTS
a sole proprietorship
www.ahoarch.com

STATE OF KENTUCKY
JEFFREY BOYER
40070
REGISTERED PROFESSIONAL ENGINEER
10/4/24

Express Oil Change & Tire Engineers

Single Building / Right Hand Oil Change / Front Enter / Side Tire Storage

Morehead, Kentucky

FINAL

No.	Description	Date

© 2024 Aho Architects, LLC.
All Rights Reserved.

Plumbing Specifications

Project number	24029
Date	10/04/2024
Drawn by	CA
Checked by	JB

P0.02

Scale 12" = 1'-0"

10/7/2024 10:32:39 AM

SECTION 15430 - PLUMBING SPECIALTIES

A. THIS SPECIFICATION DESCRIBES THE REQUIREMENTS FOR LABOR AND MATERIALS REQUIRED FOR THE INSTALLATION OF PLUMBING SPECIALTIES INCLUDED AS PART OF THE BUILDING PLUMBING SYSTEM.

B. MANUFACTURER'S LITERATURE INDICATING MODEL NUMBERS AND OPTIONS SHALL BE SUBMITTED FOR ALL FIXTURES AND EQUIPMENT. FORMAT SHALL INCLUDE A SCHEDULE OF THE SPECIALTIES SUBMITTED AND INCLUDE IDENTIFICATION NUMBER OF EACH ITEM, SUCH AS "FD-1 FLOOR DRAIN," A LIST OF EACH COMPONENT, ACCESSORY, AND OPTION OF THE ITEM BEING SUBMITTED. THIS SCHEDULE MUST BE INCLUDED IN THE FRONT OF THE SUBMITTAL PAGE.

C. CLEANOUTS SHALL CONSIST OF A COATED CAST IRON BODY WITH THREADED TOP WITH SPIGOT OR NO-HUB CONNECTION AND GASKETED BRONZE CLOSURE PLUG WITH COUNTERSUNK SLOT. HEAD SHALL BE ADJUSTABLE IN HEIGHT; PROVIDE NON-SKID COVERS FOR FLOOR CLEANOUTS. PROVIDE THREAD SHIELD TO PROTECT ADJUSTMENT THREADS FROM CONCRETE AS REQUIRED. CLEANOUTS SHALL BE INSTALLED IN HORIZONTAL RUNS AT SPACING OF NO MORE THAN 75 FEET. INSTALL CLEANOUTS AT THE BASE OF EVERY SOIL AND WASTE STACK, AND AT EACH 90 DEGREE CHANGE IN DIRECTION. INSTALL CLEANOUTS WHICH ARE NOT EASILY ACCESSIBLE UP THROUGH FLOOR OR WALL AND PROVIDE APPLICABLE COVERS. INSTALL CLEANOUTS TO ALLOW AT LEAST 18" FOR RODDING.

D. WATER HAMMER ARRESTORS SHALL BE CONSTRUCTED OF A STAINLESS STEEL OR COPPER SHELL, STAINLESS STEEL OR ELASTOMER BELLOWS, WITH PRECHARGE OF AIR, NITROGEN, OR ARGON. ARRESTERS SHALL CONFORM TO ASSE STD. 1010, AND SHALL BE ZURN "SHOKTROL", JOSAM "ABSORBOTRON", WADE "SHOKSTOP", OR PRECISION PLUMBING PRODUCTS "SHOCK ARRESTOR". UNIT SHALL BE SIZED IN ACCORDANCE WITH TO PDI STANDARDS. WATER HAMMER ARRESTORS SHALL BE SIZED TO ACTUAL PIPE SIZE AND INSTALLED AS NEAR THE SHOCK SOURCE AS PRACTICAL. INSTALL TO ALLOW UNOBSTRUCTED PATH FROM SHOCK SOURCE TO ARRESTOR.

E. BALANCING VALVES (DOMESTIC HOT WATER RETURN): VALVES SHALL BE BELL AND GOSSETT CB SERIES CIRCUIT SETTER. PRESETTABLE BALANCE VALVE, VARIABLE ORIFICE FLOW METER AND POSITIVE SHUT-OFF SERVICE VALVE. EQUIPMENT WITH CAPPED READOUT VALVES FITTED WITH INTERNAL CHECK VALVES, ¼ INCH NPT TAPPED AND PLUGGED DRAIN PORT. BRONZE BODY/BRASS BALL CONSTRUCTION WITH GLASS AND CARBON FILLED TFE SEAT RINGS, SOLDER CONNECTIONS. VALVES TO HAVE DIFFERENTIAL PRESSURE READ-OUT PORTS ACROSS VALVE SEAT AREA. FURNISH WITH PREFORMED INSULATION TO PERMIT ACCESS FOR BALANCE AND READ-OUT. TACO IS AN APPROVED EQUAL.

F. PRESSURE REDUCING VALVES: VALVES SHALL BE EQUAL TO WATTS SERIES U5B-GG BRONZE BODY SINGLE SEATED WITH COMPOSITION DIAPHRAGM AND STAINLESS STEEL SPRING, DIRECT ACTING WITH STRAINER ON INLET SIDE, INTEGRAL BY-PASS CHECK VALVE, GAUGE, AND THREADED ENDS. INSTALL IN ACCORDANCE WITH MANUFACTURER'S INSTRUCTIONS.

G. TRAP GUARD SEALS: PROVIDE AN ELASTOMERIC, NORMALLY CLOSED TRAP GUARD DEVICE TO PREVENT EVAPORATION OF THE TRAP SEAL AND TO PROTECT AGAINST SEWER GASES FROM BACKING UP INTO HABITABLE AREAS. DEVICE SHALL OPEN WITH FLUID AND ALLOWS LIQUID DRAINAGE TO FLOW THROUGH INTO THE BUILDING DRAIN. TRAP SEAL SHALL BE TRAP GUARD BY PRO-VENT SYSTEMS OR APPROVED EQUAL.

H. FLOOR DRAINS (FD-1): DRAIN SHALL INCLUDE COATED CAST IRON BODY WITH BOTTOM OUTLET, ½" TRAP PRIMER CONNECTION, COMBINATION INVERTIBLE MEMBRANE CLAMP AND ADJUSTABLE COLLAR WITH TYPE "B" ROUND POLISHED NICKEL-BRONZE LIGHT DUTY STRAINER TOP WITH SQUARE HEELPROOF OPENINGS AND SECURED GRATE. DRAIN SHALL BE ZURN ZN-415-P-NH OR EQUAL BY JAY R. SMITH, WADE, OR JOSAM. PROVIDE 3 FT. SQ., 6 MIL BUTYL MEMBRANE, AT EACH FLOOR DRAIN. CLAMP MEMBRANE. MEMBRANE SHALL BE RECESSED IN THE FLOOR SLAB WITH TOPPING POURED OVER IT. DRAINS INSTALLED IN ELEVATED BUILDING FLOORS SHALL BE SEALED IN SUCH A MANNER AS TO PREVENT LEAKAGE OF WATER AROUND TRAP AND BODY TO CEILING BELOW.

I. FLOOR DRAIN (FD-2): DRAIN SHALL INCLUDE SUR-SET BUCKET, 9" DIAMETER MEDIUM DUTY CAST IRON GRATE, COATED CAST IRON BODY, ½" TRAP PRIMER CONNECTION, BOTTOM OUTLET, SEEPAGE PAN, AND COMBINATION MEMBRANE CLAMP. DRAIN SHALL BE ZURN Z-S54-P-NH OR EQUAL BY JAY R. SMITH, WADE, OR JOSAM. PROVIDE 3 FT. SQ., 6 MIL BUTYL MEMBRANE, AT EACH FLOOR DRAIN. CLAMP MEMBRANE. MEMBRANE SHALL BE RECESSED IN THE FLOOR SLAB WITH TOPPING POURED OVER IT. DRAINS INSTALLED IN ELEVATED BUILDING FLOORS SHALL BE SEALED IN SUCH A MANNER AS TO PREVENT LEAKAGE OF WATER AROUND TRAP AND BODY TO CEILING BELOW.

J. ROOF DRAINS (RD): DRAIN SHALL CONSIST OF COATED CAST IRON BODY WITH NON-PUNCTURING FLUSHING CLAMP WITH INTEGRAL GRAVEL STOP AND DECK CLAMP. DRAIN SHALL HAVE AN ADJUSTABLE EXTENSION TO PLACE FLASHING CLAMP ABOVE INSULATION WHILE BODY RESTS ON THE ROOF STRUCTURE. PROVIDE WITH ALUMINUM ROOF DOME. PROVIDE 1710 EXPANSION JOINT IF PIPING IS NOT OFFSET BELOW THE ROOF. DRAIN SHALL BE JAY R. SMITH 1015Y-R-C-AD OR EQUAL BY WADE, JOSAM, OR ZURN. ROOF DRAINS SHALL BE INSTALLED IN ACCORDANCE WITH MANUFACTURER'S INSTRUCTIONS. COORDINATE THE WORK WITH ROOF DECK AND ROOFING CONTRACTOR TO INSURE PROPER AND TIMELY INSTALLATION.

K. OVERFLOW DRAINS (OD): DRAIN SHALL CONSIST OF COATED CAST IRON BODY WITH NON-PUNCTURING FLASHING CLAMP, TWO (2) INCH WATER DAM, AND DECK CLAMP. PROVIDE ALUMINUM ROOF DOME. PROVIDE 1710 EXPANSION JOINT IF PIPING IS NOT OFFSET BELOW ROOF. DRAIN SHALL BE J.R. SMITH 1080Y-R-C-AD OR EQUAL BY WADE, JOSAM, OR ZURN. OVERFLOW DRAINS SHALL BE INSTALLED IN ACCORDANCE WITH MANUFACTURER'S INSTRUCTIONS. COORDINATE THE WORK WITH ROOF DECK AND ROOFING CONTRACTOR TO INSURE PROPER AND TIMELY INSTALLATION.

L. DOWNSPOUT NOZZLES: WALL MOUNTED OUTLET NOZZLE FOR STORM DRAINAGE, PLAIN BRONZE BODY, DECORATION FACE OF WALL AND FLANGE, WITH SCREEN AND THREADED CONNECTOR. UNITS SHALL BE JAY R SMITH 1770-BS OR EQUAL BY ZURN, WADE, OR JOSAM.

M. HUB DRAIN (HD): DRAIN SHALL INCLUDE CAST IRON DEEP SEAL "P" TRAP WITH INDIRECT WASTE FUNNEL INLET AND SIDE OUTLET THREADED AND WITH ½ INCH THREADED FLUSH CONNECTION. DRAIN SHALL BE JOSAM 8821-051 OR EQUAL BY ZURN, JAY R. SMITH, OR WADE.

N. REDUCED PRESSURE ZONE BACKFLOW PREVENTER (ASSE 1015): BACKFLOW PREVENTER SHALL INCLUDE NPT BODY CONNECTIONS, QUARTER TURN, FULL PORT, RESILIENT SEATED BRONZE BALL VALVE, AND STRAINER. UNIT SHALL BE WATTS SERIES 909 QT OR EQUAL BY WILKINS, OR CONBRACO. BACKFLOW PREVENTERS SHALL BE INSTALLED IN ACCORDANCE WITH PER MANUFACTURER'S INSTRUCTIONS. AFTER INSTALLATION, BUT BEFORE SYSTEM IS PUT INTO SERVICE, TEST BACKFLOW PREVENTER FOR FUNCTIONALITY WITH TEST KIT AS RECOMMENDED BY MANUFACTURER. PIPE DISCHARGE FROM BACKFLOW PREVENTER VENT WITH CONNECTION-SIZE COPPER TUBING TO NEAREST FLOOR DRAIN. ENSURE AIR GAP IS PROVIDED IN RELIEF LINE EITHER BY AIR GAP FITTING OR ELEVATED DISCHARGE ABOVE DRAINS. BACKFLOW PREVENTER PIPING SHALL BE INSTALLED WITH UNIONS FOR REMOVAL.

O. WALL HYDRANTS (WH-1): WALL HYDRANTS SHALL BE NICKEL BRONZE PLATED, INTEGRAL VACUUM BREAKER, 3/4 INCH HOSE THREAD, KEY OPERATOR, NON-FREEZE TYPE, HOUSED IN A RECESSED STAINLESS STEEL BOX WITH HINGED LOCKING COVER. HYDRANT SHALL BE JAY R. SMITH 5509 QT OR EQUAL BY WADE, JOSAM OR ZURN. INSTALL WALL HYDRANTS AS INDICATED ON DRAWINGS, MINIMUM HEIGHT 18" A.F.F. UNLESS OTHERWISE INDICATED.

P. HOSE BIBB (HB-1): CHROME PLATED, ¾ INCH HOSE THREAD OUTLET, LOCK SHIELD CAP WITH INTEGRAL VACUUM BREAKER. CHICAGO FAUCET NO. 952 OR T&S BRASS.

Q. OIL SEPARATOR: STRIEM HIGH EFFICIENCY OIL/WATER SEPARATOR MODEL OS-25 SHALL BE LIFETIME GUARANTEED AND MADE IN THE USA. SEPARATOR SHALL BE CERTIFIED TO IAPMO IGC 325 AND CARRY A UPC LISTING. SEPARATOR SHALL BE CONSTRUCTED OF POLYETHYLENE. SEPARATOR SHALL BE MANUFACTURED FOR ABOVE- OR BELOW-GRADE INSTALLATION. FIELD ADJUSTABLE RISER SYSTEM IS AVAILABLE AS AN OPTION TO BRING MANHOLE COVER TO GRADE. SEPARATOR FLOW RATE SHALL BE 25 GPM. SEPARATOR LIQUID HOLDING CAPACITY SHALL BE 21 GALLONS AND OIL CAPACITY SHALL BE 5.25 GALLONS. SOLIDS CAPACITY SHALL BE 6 GALLONS. COVER SHALL PROVIDE WATER/GAS-TIGHT SEAL AND HAVE A MAXIMUM 450 LBS. LOAD CAPACITY WHEN UNIT IS INSTALLED ABOVE-GRADE, AND 2,500 LBS. WHEN BURIED WITH SR16 RISER.

SECTION 15440 - PLUMBING FIXTURES

A. THIS SPECIFICATION DESCRIBES THE REQUIREMENTS FOR PLUMBING FIXTURES AND THEIR INSTALLATION.

B. SUBMITTALS SHALL INCLUDE MANUFACTURER'S DATA SHEETS AND DIMENSIONAL INFORMATION ON ALL FIXTURES AND ACCESSORIES. FORMAT SHALL INCLUDE A SCHEDULE OF THE FIXTURES SUBMITTED AND INCLUDE IDENTIFICATION NUMBER OF EACH ITEM, SUCH AS "P-1 WATER CLOSET", AND LIST OF EACH COMPONENT AND ACCESSORY OF THE FIXTURE, INCLUDING MANUFACTURER'S MODEL NUMBER. THIS SCHEDULE MUST BE INCLUDED IN THE FRONT OF THE SUBMITTAL BOOKLET.

C. VITREOUS WARE SHALL BE WHITE, REGULAR SECTION, OF WEIGHT REQUIRED, FREE FROM CRACKS, FLAWS, BLISTERS, CRAZES OR OTHER DEFECTS. PROVIDE WITH MOUNTING BRACKETS FOR WALL MOUNTED FIXTURES UNLESS FLOOR CARRIERS ARE INDICATED.

D. STAINLESS STEEL SHALL HAVE MACHINE GROUND FINISH. DECKS AND SINK COMPARTMENT SIDES SHALL BE BUFFED. EXPOSED SURFACES SHALL HAVE NO. 4 SATIN FINISH. INTERIOR SURFACES SHALL BE DEADENED. EXPOSED METAL PARTS SHALL BE CHROMIUM PLATED AND PROTECTED DURING CONSTRUCTION BY A COAT OF GREASE.

E. WATER CLOSET AND URINAL CARRIERS SHALL HAVE TAPERED THREAD FACE PLATE, PLASTIC COUPLING WITH TEST CAP, AND NEOPRENE RUBBER GASKET. LAVATORY, SINK AND URINAL CARRIERS SHALL HAVE RECTANGULAR STRUCTURAL STEEL UPRIGHTS. CARRIERS SHALL HAVE NECESSARY ACCESSORIES FOR PROPER INSTALLATION. CARRIERS SHALL BE ACCORDING TO ANSI A112.6.1M.

F. WATER CLOSETS AND URINALS SHALL HAVE BOLT CAPS.

G. SEATS SHALL BE WHITE, SOLID PLASTIC, WITH INTERNAL CHECK AND MOLDED STAINLESS STEEL HINGE WITHOUT VISIBLE METAL PARTS, EXCEPT AS HEREINAFTER SPECIFIED.

H. CHROMIUM PLATED TRAPS SHALL BE BRASS WITH CHROMIUM PLATED NIPPLE TO WALL AND ESCUTCHEON.

I. FITTINGS AND ACCESSORIES SPECIFIED DESIGNATE TYPE ONLY; PROVIDE MODIFICATIONS TO MAKE FITTINGS WORK PROPERLY WITH FIXTURE AND PIPING. PROVIDE NECESSARY TAILPIECE AND SHANKS.

J. INSTALL EYEWASH STATION WITHIN 10 FEET OF HAZARD AREA, COMPLETELY UNOBSTRUCTED FROM VIEW OR ACCESS. ANCHOR TO FLOOR IN ACCORDANCE WITH MANUFACTURER'S REQUIREMENTS. PROVIDE AND INSTALL STRAINER AT DOMESTIC WATER INLET TO STATION. PROVIDE AND INSTALL ON WALL ABOVE STATION, A PLASTIC ENGRAVED SIGN READING "EMERGENCY USE ONLY", WHITE LETTERS ON RED BACKGROUND. PROVIDE MINIMUM 5 GALLON CONTAINER AND PROVIDE TIMED FLOW TEST FOR ALL EYEWASHES AND EMERGENCY SHOWERS. SUBMIT REPORT TO ARCHITECT OR ENGINEER PRIOR TO FINAL INSPECTION.

K. FIXTURES

WC-1 WATER CLOSET (17-1/2" HIGH, FLOOR MOUNT, TANK TYPE):
1. KOHLER K-3493 VITREOUS CHINA, 1.4 GALLON FLUSH; PRESSURE ASSISTED CLOSE COUPLED TANK WITH ELONGATED BOWL.
2. KOHLER K-7637 3/8" POLISHED CHROME ANGLE SUPPLY WITH STOP.
3. BENEKE 527SS ELONGATED SELF-SUSTAINING WITH CHECK HINGES, OPEN FRONT, HEAVY DUTY SOLID PLASTIC SEAT.

LAV-1 LAVATORY (ADA COMPLIANT, WALL HUNG):
1. KOHLER K-2005 WALL MOUNTED LAVATORY, VITREOUS CHINA, WITH OVER FLOW AND 4" FAUCET CENTERS, DRILLED FOR CONCEALED ARM CARRIER.
2. ZURN Z-7443-VP SINGLE CONTROL FAUCET, LEVER HANDLE, 4" CENTER MOUNT, 1-1/4" GRID STRAINER.
3. MCGUIRE 170 1/2" X 3/8" SWEAT LAVATORY SUPPLIES WITH WHEEL HANDLE STOPS.
4. MCGUIRE 8902, 1-1/4 INCH X 1-1/2 INCH P-TRAP WITH ESCUTCHEON; ZURN GH, 1-1/4" OFFSET HANDICAP GRID DRAIN.
5. TRAP AND SUPPLIES COVERED WITH TRAP WRAP EQUAL TO BROCHAR INDUSTRIES.
6. ZURN Z-1231 LAVATORY CONCEALED ARM CARRIER.

EW-1 EYE/FACE WASH (PEDESTAL MOUNT):
1. STAINLESS STEEL BOWL WITH TWIN EYEWASH HEADS WITH FLIP TOP COVERS, CHROME PLATED WATER EYEWASH ASSEMBLY.
2. INCLUDE UNIVERSAL EMERGENCY SIGN CONFORMING TO ANSI Z535.1.
3. INCLUDE MIXING VALVE/TEMPERED WATER BLENDING SYSTEM.
4. EQUAL TO GUARDIAN G1825. CONFORM TO ANSI Z358.1.

EWC-1 WATER COOLER (WALL MOUNT, BOTTLE FILLING STATION, ADA):
1. ELKAY LZSTL8WSVRSK. HANDS FREE, ADA COMPLIANT DUAL STATION WITH BOTTLE FILLING STATION.
2. MCGUIRE 8902 P-TRAP WITH ESCUTCHEON.
3. MCGUIRE 170 STOP AND SUPPLY.

SK-1 LAUNDRY TUB (SINGLE COMPARTMENT):
1. FIAT MODEL NO. FL-1 SINGLE MOLDED STONE LAUNDRY TUB WITH FREE DRAINING SOAP TRAY ON BACK LEDGE. INCLUDE FOUR WHITE ENAMELED ENAMEL ANGLE LEGS THAT SLIP INTO MOLDED SOCKETS. SELF-LEVELING LEGS WITH FLOOR ANCHORS.
2. FIAT MODEL A-1 BRASS FAUCET WITH SWING SPOUT.
3. MCGUIRE 170 1/2" X 3/8" LAVATORY SUPPLIES WITH WHEEL HANDLE STOPS.
4. MCGUIRE #150 TRAY PLUG WITH RUBBER STOPPER (1-1/2").
5. MCGUIRE #8912 1-1/2" X 1-1/2", 17 GAUGE BRASS P-TRAP.

CMVB COFFEE MAKE VALVE BOX:
1. GUY GRAY MODEL BIM 875.
2. 1/2" FIP x 1/4" O.D. OUTLET COMPRESSION ANGLE VALVE.
3. BOX IS 16 GAUGE STEEL WITH EPOXY FINISH.

L. ACCEPTABLE MANUFACTURERS: FIXTURES, VITREOUS CHINA - AMERICAN STANDARD, CRANE, ELJER, KOHLER FIXTURES, STAINLESS STEEL - JUST, ELKAY FLUSH VALVES - SLOAN, DELANEY, ZURN TOILET SEATS - OLSONITE, SPERZEL, CHURCH, BENEKE, BEMIS FAUCETS - T&S BRASS, SPEAKMAN, CHICAGO, SYMMONS, ELJER TERRAZZO - FIAT, CUTLER, FLORESTONE, STERN-WILLIAMS TRIM, CHROMED BRASS - MCGUIRE, SANITARY DASH, BRIDGEPORT SHOWER MIXING VALVES - POWERS, LEONARD, LAWLER, SYMMONS, SPEAKMAN, ZURN SHOWER HEADS - SYMMONS, SPEAKMAN, ZURN ELECTRIC WATER COOLERS - ELKAY, HALSEY TAYLOR, SUNROC, OASIS, HAWS. USE ONLY WATER COOLERS WHICH DO NOT USE CFC'S FOR REFRIGERATION. SCRUB SINKS - ELJER, AMERICAN STANDARD, KOHLER, CRANE CARRIERS - J. R. SMITH, JOSAM, ZURN, WADE EMERGENCY EQUIPMENT - GUARDIAN, HAWS, WESTERN, SPEAKMAN

M. INSTALL PLUMBING FIXTURE LEVEL AND PLUMB, IN ACCORDANCE WITH FIXTURE MANUFACTURER'S PUBLISHED LITERATURE, ROUGH-IN DRAWINGS, CODES REGULATIONS, AND REFERENCE STANDARDS. FASTEN PLUMBING FIXTURES SECURELY TO SUPPORTS OR BUILDING STRUCTURE. RIGIDLY SUPPORT WATER SUPPLIES BEHIND OR WITHIN WALL CONSTRICTION. PROVIDE STOP VALVE IN THE WATER SUPPLY TO EACH FIXTURE IN AN ACCESSIBLE LOCATION. CONNECT WALL HUNG URINALS TO WASTE PIPING WITH RED BRASS NIPPLES. CONNECT FIXTURES TO WATER SUPPLY WITH COPPER OR BRASS (NO STEEL). EACH FIXTURE, FLOOR DRAIN AND PIECE OF EQUIPMENT REQUIRING CONNECTION TO DRAINAGE SYSTEM TO HAVE SEPARATE TRAPS INSTALLED AS CLOSE TO FIXTURE AS POSSIBLE. PROVIDE IRON OR STEEL BACKING FOR ALL WALL MOUNTED FIXTURES (OR WOOD BACKING ONLY IF BUILDING STRUCTURE IS WOOD). PROVIDE ESCUTCHEONS AT EACH WALL, FLOOR AND CEILING PENETRATION IN EXPOSED FINISHED LOCATIONS AND WITHIN CABINETS AND MILLWORK. APPLY SCP3154 PRIMER AND GENERAL ELECTRIC CO.'S NO. 1702 SILICONE SANITARY SEALANT AROUND PLUMBING FIXTURES TO CONCEAL VOIDS AT WALL AND CONTACT POINTS OF FIXTURE AFTER WALLS HAVE BEEN PAINTED. APPLY SCP3154 PRIMER AND GENERAL ELECTRIC CO.'S SILPRUF SEALANT ON PLAIN CONCRETE WALLS.

SECTION 15450 - PLUMBING EQUIPMENT

A. ELECTRIC WATER HEATERS:
1. WATER HEATER SHALL COMPLY WITH UL 1453.
2. STORAGE TANK CONSTRUCTION: ASME-CODE STEEL WITH 150 PSIG WORKING-PRESSURE RATING. STEEL JACKET WITH ENAMELED FINISH.
3. TAPPINGS: FACTORY FABRICATED OF MATERIALS COMPATIBLE WITH TANK FOR PIPING CONNECTIONS, RELIEF VALVE, PRESSURE GAGE, THERMOMETER, DRAIN, ANODE RODS, AND CONTROLS AS REQUIRED. ATTACH TAPPINGS TO TANK SHELL BEFORE TESTING AND LABELING. TAPPINGS SHALL HAVE THREADED ENDS ACCORDING TO ASME B1.20.1, PIPE THREADS.
4. INTERIOR FINISH: MATERIALS AND THICKNESSES COMPLYING WITH NSF 61, BARRIER MATERIALS FOR POTABLE-WATER TANK LININGS. EXTEND FINISH INTO AND THROUGH TANK FITTINGS AND OUTLETS.
5. INSULATION: COMPLY WITH ASHRAE 90.1. SURROUND ENTIRE STORAGE TANK EXCEPT CONNECTIONS AND CONTROLS.
6. HEATING ELEMENTS: ELECTRIC, SCREW-IN OR BOLT-ON, IMMERSION TYPE. STAGING AS NOTED IN SCHEDULE.
7. TEMPERATURE CONTROL: ADJUSTABLE IMMERSION THERMOSTAT.
8. SAFETY CONTROLS: AUTOMATIC, HIGH-TEMPERATURE-LIMIT AND LOW-WATER CUTOFF DEVICES OR SYSTEMS.
9. DRAIN VALVE: ASSE 1005, CORROSION-RESISTANT METAL, FACTORY INSTALLED.
10. ANODE RODS: FACTORY INSTALLED, MAGNESIUM.
11. DIP TUBE: FACTORY INSTALLED. NOT REQUIRED IF COLD-WATER INLET IS NEAR BOTTOM OF STORAGE TANK.
12. SPECIAL REQUIREMENT: NSF 5 CONSTRUCTION.
13. ACCEPTABLE MANUFACTURERS ARE LOCHINVAR, A. O. SMITH, OR PRIOR APPROVAL EQUAL.

B. THERMAL EXPANSION TANK (DOMESTIC WATER):
1. PRE-CHARGED HYDROPNEUMATIC STEEL EXPANSION TANK, CONSTRUCTED IN ACCORDANCE WITH SECTION VIII OF ASME BOILER AND PRESSURE CODE, WITH ALL WELDS CONFORMING TO ASME SECTION IX. TANK MUST BE STAMPED WITH A MAXIMUM WORKING PRESSURE OF 125 PSI, AND A MAXIMUM WORKING TEMPERATURE OF 200 DEGREES F. ALL INTERNAL WETTED PARTS MUST COMPLY WITH FDA REGULATIONS AND APPROVALS. AN INTERNAL BUTYL DIAPHRAGM WILL BE USED TO ISOLATE AIR FROM WATER. AMTROL OR APPROVED EQUAL AST SERIES.

Pinnacle ENGINEERING, INC.
Engineering & Design Consultants
2111 Parkway Office Circle, Suite 125
Birmingham, AL 35244
(205) 733-6912 FAX: (205) 733-6913
Job No.24207

AHO ARCHITECTS
a sole proprietorship
www.ahoarch.com

STATE OF KENTUCKY
JEFFREY BOYER
40070
LICENSED PROFESSIONAL ARCHITECT
10/4/24

Express Oil Change & Tire Engineers

Single Building / Right Hand Oil Change / Front Enter / Side Tire Storage

Morehead, Kentucky

FINAL

No.	Description	Date

© 2024 Aho Architects, LLC.
All Rights Reserved.

Plumbing Specifications

Project number	24029
Date	10/04/2024
Drawn by	CA
Checked by	JB

P0.03

Scale 12" = 1'-0"

10/7/2024 10:32:39 AM

Pinnacle ENGINEERING, INC.
Engineering & Design Consultants
2111 Parkway Office Circle, Suite 125
Birmingham, AL 35244
(205) 733-6912 FAX: (205) 733-6913
Job No.24207

AHO ARCHITECTS
a sole proprietorship
www.ahoarch.com

STATE OF KENTUCKY
JEFFREY BOYER
40070
LICENSED PROFESSIONAL ENGINEER
10/4/24

GENERAL NOTES:

1. CONTRACTOR SHALL VERIFY EXISTING CONDITIONS IN FIELD PRIOR TO BEGINNING WORK.
2. SPACE ABOVE CEILING IS LIMITED. CAREFUL COORDINATION WITH LIGHTING, ELECTRICAL, MECHANICAL, FIRE PROTECTION, STRUCTURAL AND ARCHITECTURAL WORK IS CRITICAL FOR COMPLETE PIPING INSTALLATION. CONTRACTOR SHALL PROVIDE NECESSARY OFFSETS IN NEW AND EXISTING PIPING AND ELECTRICAL CONDUIT AS REQUIRED TO ACCOMMODATE NEW WORK, CONTRACTOR SHALL ALLOW FOR ANY CONFLICTS ENCOUNTERED.
3. PIPING LAYOUTS ARE DIAGRAMMATIC AND DO NOT SHOW ALL ELEMENTS OF CONSTRUCTION. CONTRACTOR SHALL BE RESPONSIBLE FOR ALL CHANGES ON DIRECTION, ELEVATION AND MINOR OFFSETS NECESSARY FOR COMPLETE INSTALLATION OF ELEMENTS SHOWN.
4. ALL WASTE PIPING SHOWN IS BELOW FINISHED FLOOR UNLESS OTHERWISE NOTED. ALL VENT PIPING SHOWN IS ABOVE CEILING UNLESS OTHERWISE NOTED.
5. REFER TO ARCHITECTURAL REFLECTED CEILING PLANS FOR LOCATIONS OF ALL CEILING MOUNTED DEVICES. REFER TO ARCHITECTURAL FLOOR PLANS FOR ALL DIMENSIONS.
6. COORDINATE ACCESS DOOR LOCATIONS WITH GENERAL CONTRACTOR AND ARCHITECT.

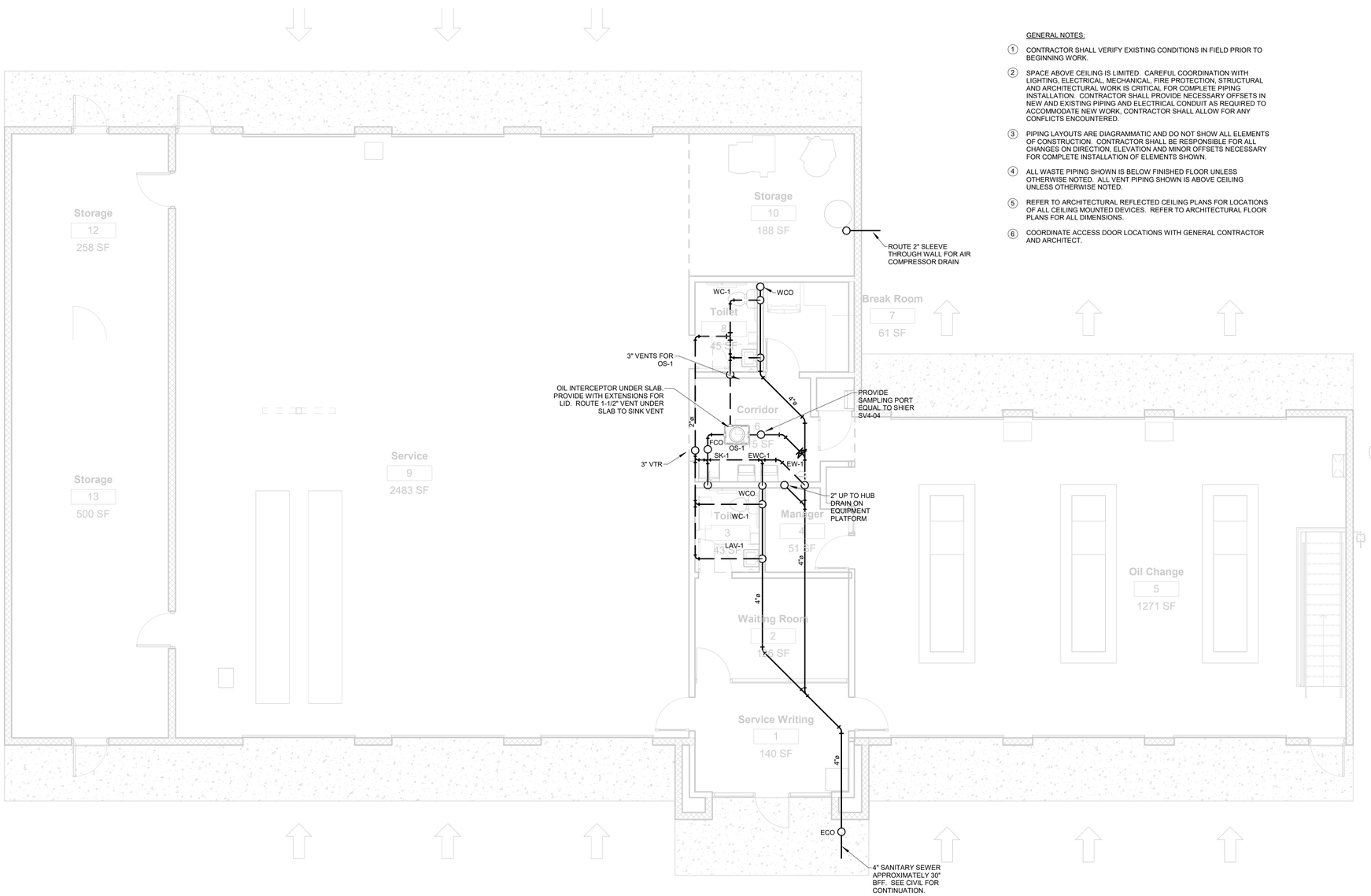

NORTH

MAIN FLOOR PLAN
PLUMBING - GRAVITY
3/16" = 1'-0"

Express Oil Change & Tire Engineers

Single Building / Right Hand Oil Change / Front Enter / Side Tire Storage

Morehead, Kentucky

FINAL

No.	Description	Date

© 2024 Aho Architects, LLC.
All Rights Reserved.

Plumbing Floor Plan Gravity

Project number	24029
Date	10/04/2024
Drawn by	CA
Checked by	JB

P1.01

Scale As indicated

10/7/2024 10:32:39 AM

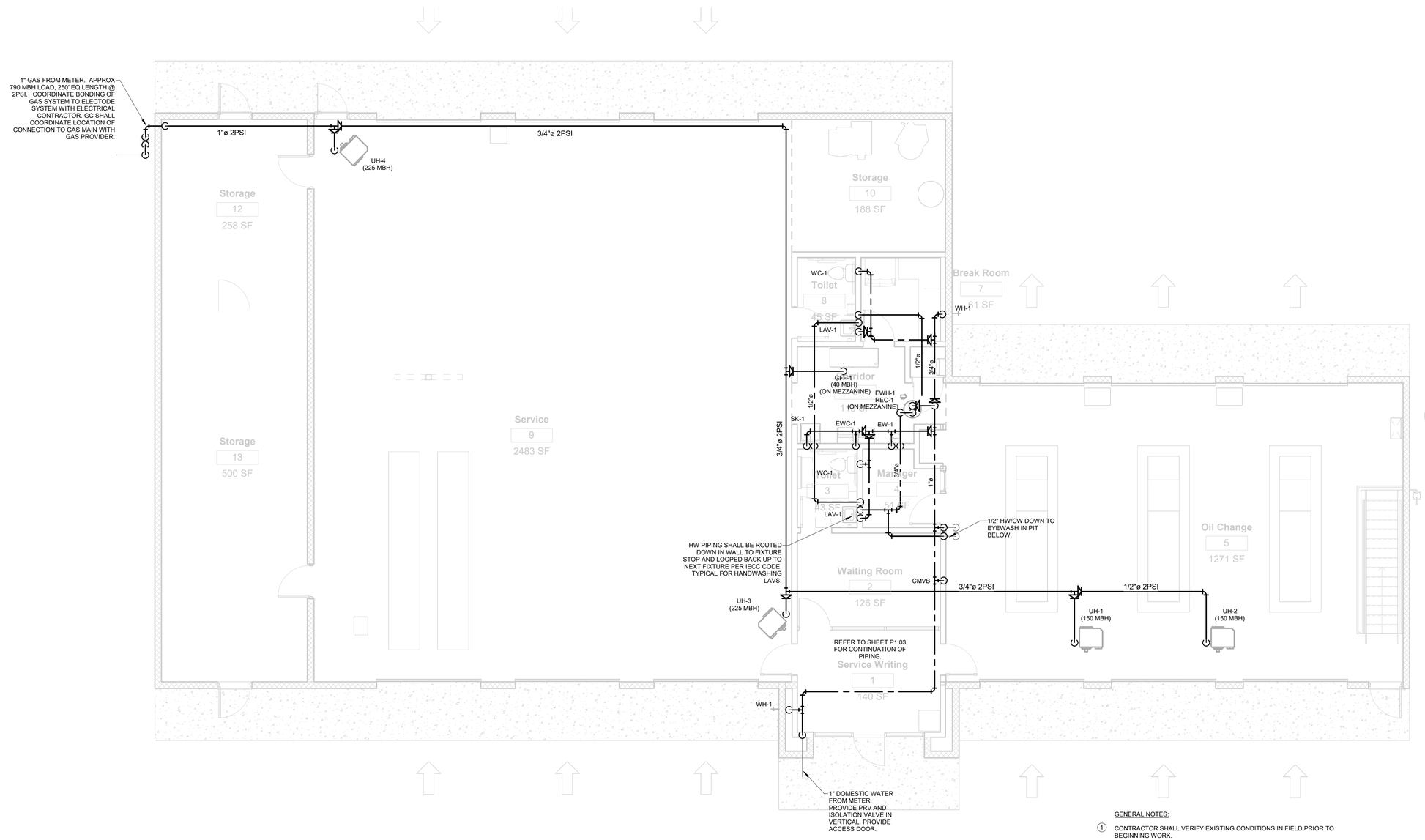

NORTH

MAIN FLOOR PLAN
PLUMBING - PRESSURE
3/16" = 1'-0"

GENERAL NOTES:

1. CONTRACTOR SHALL VERIFY EXISTING CONDITIONS IN FIELD PRIOR TO BEGINNING WORK.
2. SPACE ABOVE CEILING IS LIMITED. CAREFUL COORDINATION WITH LIGHTING, ELECTRICAL, MECHANICAL, FIRE PROTECTION, STRUCTURAL AND ARCHITECTURAL WORK IS CRITICAL FOR COMPLETE PIPING INSTALLATION. CONTRACTOR SHALL PROVIDE NECESSARY OFFSETS IN NEW AND EXISTING PIPING AND ELECTRICAL CONDUIT AS REQUIRED TO ACCOMMODATE NEW WORK. CONTRACTOR SHALL ALLOW FOR ANY CONFLICTS ENCOUNTERED.
3. PIPING LAYOUTS ARE DIAGRAMMATIC AND DO NOT SHOW ALL ELEMENTS OF CONSTRUCTION. CONTRACTOR SHALL BE RESPONSIBLE FOR ALL CHANGES ON DIRECTION, ELEVATION AND MINOR OFFSETS NECESSARY FOR COMPLETTE INSTALLATION OF ELEMENTS SHOWN.
4. ALL PRESSURE PIPING SHOWN IS ABOVE THE CEILING UNLESS OTHERWISE NOTED. CONCEALED PIPING SHALL BE PEX OR COPPER. EXPOSED PIPING IN PUBLIC SPACES SHALL BE COPPER.
5. REFER TO ARCHITECTURAL REFLECTED CEILING PLANS FOR LOCATIONS OF ALL CEILING MOUNTED DEVICES. REFER TO ARCHITECTURAL FLOOR PLANS FOR ALL DIMENSIONS.
6. COORDINATE ACCESS DOOR LOCATIONS WITH GENERAL CONTRACTOR AND ARCHITECT.

Pinnacle ENGINEERING, INC.
Engineering & Design Consultants
2111 Parkway Office Circle, Suite 125
Birmingham, AL 35244
(205) 733-6912 FAX: (205) 733-6913
Job No.24207

AHO ARCHITECTS
a sole proprietorship
www.ahoarch.com

STATE OF KENTUCKY
JEFFREY BOYER
40070
PROFESSIONAL ENGINEER
10/4/24

Express Oil Change & Tire Engineers

Single Building / Right Hand Oil Change / Front Enter / Side Tire Storage

Morehead, Kentucky

FINAL

No.	Description	Date

© 2024 Aho Architects, LLC.
All Rights Reserved.

Plumbing Floor Plan Pressure

Project number	24029
Date	10/04/2024
Drawn by	CA
Checked by	JB

P1.02

Scale As indicated

10/7/2024 10:32:40 AM

Pinnacle
ENGINEERING, INC.
Engineering & Design Consultants
2111 Parkway Office Circle, Suite 125
Birmingham, AL 35244
(205) 733-6912 FAX: (205) 733-6913
Job No.24207

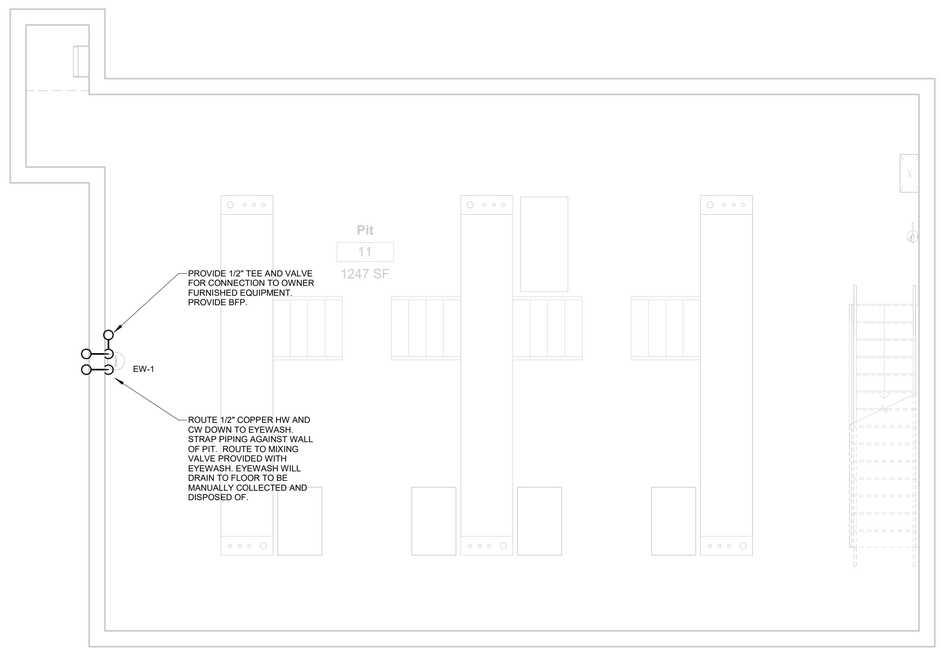

NORTH

PIT FLOOR PLAN PLUMBING
1/4" = 1'-0"

GENERAL NOTES:

1. CONTRACTOR SHALL VERIFY EXISTING CONDITIONS IN FIELD PRIOR TO BEGINNING WORK.
2. SPACE ABOVE CEILING IS LIMITED. CAREFUL COORDINATION WITH LIGHTING, ELECTRICAL, MECHANICAL, FIRE PROTECTION, STRUCTURAL AND ARCHITECTURAL WORK IS CRITICAL FOR COMPLETE PIPING INSTALLATION. CONTRACTOR SHALL PROVIDE NECESSARY OFFSETS IN NEW AND EXISTING PIPING AND ELECTRICAL CONDUIT AS REQUIRED TO ACCOMMODATE NEW WORK. CONTRACTOR SHALL ALLOW FOR ANY CONFLICTS ENCOUNTERED.
3. PIPING LAYOUTS ARE DIAGRAMMATIC AND DO NOT SHOW ALL ELEMENTS OF CONSTRUCTION. CONTRACTOR SHALL BE RESPONSIBLE FOR ALL CHANGES ON DIRECTION, ELEVATION AND MINOR OFFSETS NECESSARY FOR COMPLETE INSTALLATION OF ELEMENTS SHOWN.
4. ALL PRESSURE PIPING SHOWN IS ABOVE THE CEILING UNLESS OTHERWISE NOTED. ALL TRAP PRIMER LINES AND HOT WATER RETURN LINES SHALL BE ½" UNLESS OTHERWISE NOTED.
5. REFER TO ARCHITECTURAL REFLECTED CEILING PLANS FOR LOCATIONS OF ALL CEILING MOUNTED DEVICES. REFER TO ARCHITECTURAL FLOOR PLANS FOR ALL DIMENSIONS.
6. COORDINATE ACCESS DOOR LOCATIONS WITH GENERAL CONTRACTOR AND ARCHITECT.

AHO ARCHITECTS
a sole proprietorship
www.ahoarch.com

STATE OF KENTUCKY
JEFFREY BOYER
40070
LICENSED PROFESSIONAL ENGINEER
10/4/24

Express Oil Change & Tire Engineers
Single Building / Right Hand Oil Change / Front Enter / Side Tire Storage
Morehead, Kentucky

FINAL

No.	Description	Date

© 2024 Aho Architects, LLC.
All Rights Reserved.

Partial Plumbing Floor Plans - Pit and Platform

Project number	24029
Date	10/04/2024
Drawn by	CA
Checked by	JB

P1.03

Scale	As indicated

10/7/2024 10:32:40 AM

Pinnacle
ENGINEERING, INC.
Engineering & Design Consultants
2111 Parkway Office Circle, Suite 125
Birmingham, AL 35244
(205) 733-6912 FAX: (205) 733-6913
Job No.24207

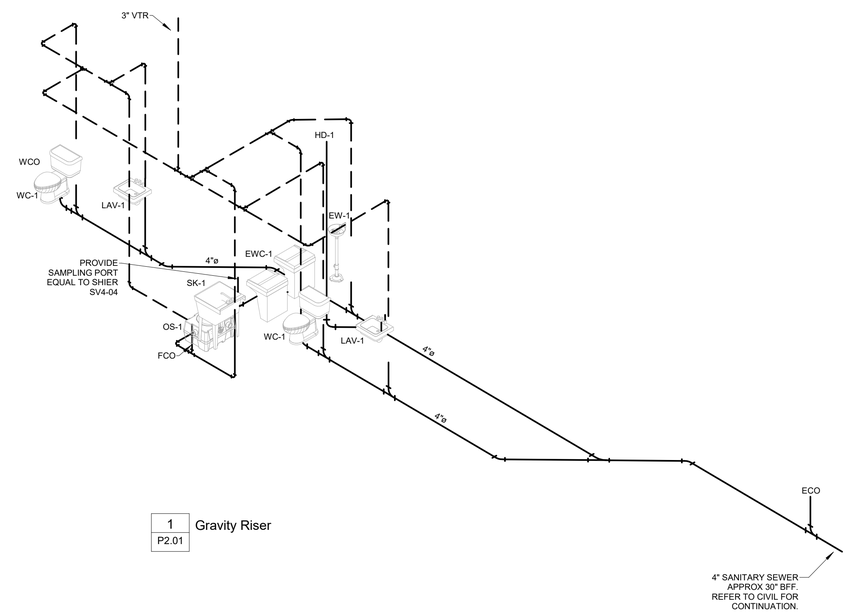

1 P2.01 Gravity Riser

AHO ARCHITECTS
a sole proprietorship
www.ahoarch.com

STATE OF KENTUCKY
JEFFREY BOYER
40070
PROFESSIONAL ENGINEER
10/4/24

Express Oil Change & Tire Engineers

Single Building / Right Hand Oil Change / Front Enter / Side Tire Storage

Morehead, Kentucky

FINAL

No.	Description	Date

© 2024 Aho Architects, LLC.
All Rights Reserved.

Plumbing Riser - Gravity

Project number	24029
Date	10/04/2024
Drawn by	CA
Checked by	JB

P2.01

Scale

10/7/2024 10:32:40 AM

Pinnacle ENGINEERING, INC.
Engineering & Design Consultants
2111 Parkway Office Circle, Suite 125
Birmingham, AL 35244
(205) 733-6912 FAX: (205) 733-6913
Job No.24207

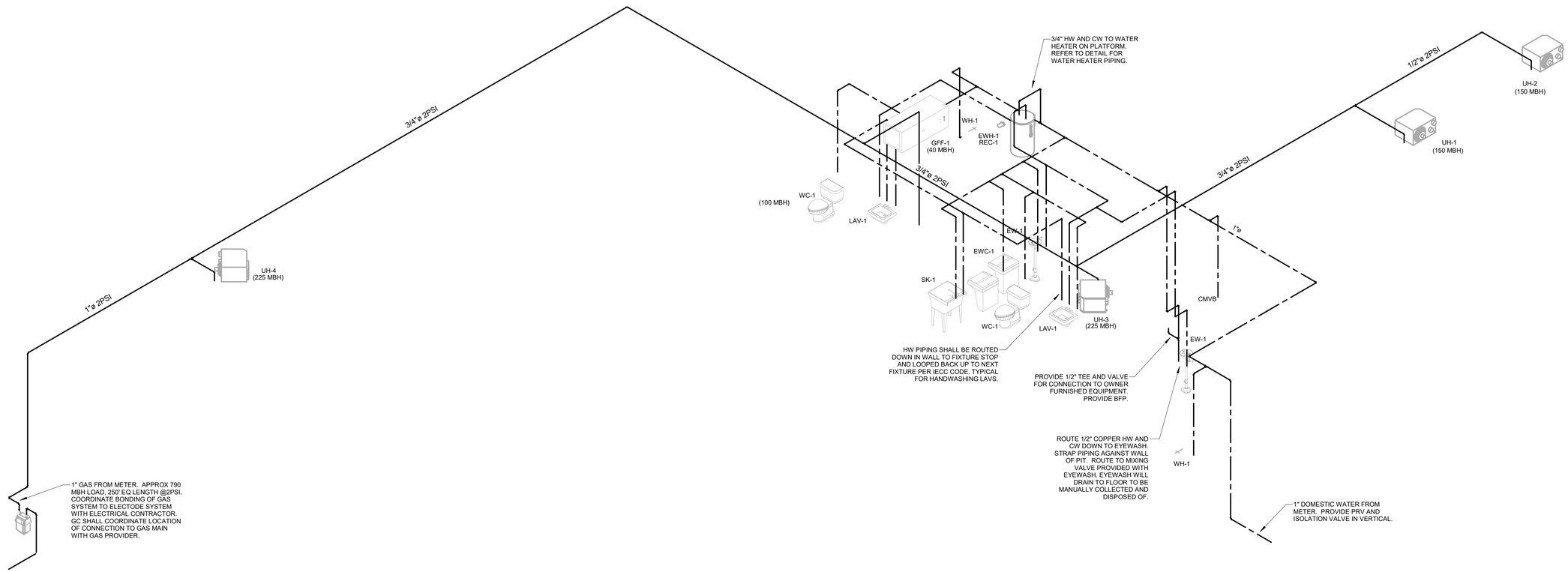

2 P2.02 Pressure Riser

AHO ARCHITECTS
a sole proprietorship
www.ahoarch.com

STATE OF KENTUCKY
JEFFREY BOYER
40070
PROFESSIONAL ENGINEER
10/4/24

Express Oil Change & Tire Engineers

Single Building / Right Hand Oil Change / Front Enter / Side Tire Storage

Morehead, Kentucky

FINAL

No.	Description	Date

© 2024 Aho Architects, LLC.
All Rights Reserved.

Plumbing Riser - Pressure

Project number	24029
Date	10/04/2024
Drawn by	CA
Checked by	JB

P2.02

Scale

10/7/2024 10:32:40 AM

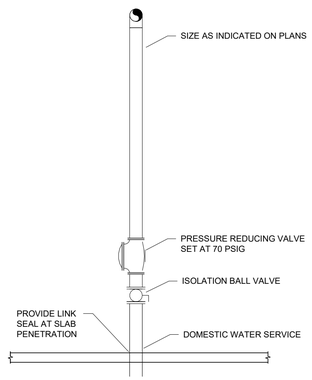

5 / P2.02 DOMESTIC WATER ENTRANCE DETAIL
NO SCALE

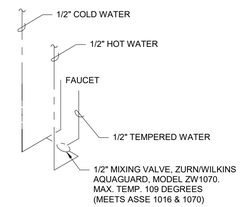

SINGLE

3 / P2.02 TYPICAL LAVATORY MIXING VALVE
SCALE: NONE

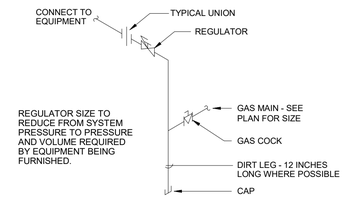

1 / P2.02 TYPICAL GAS CONNECTION
NO SCALE

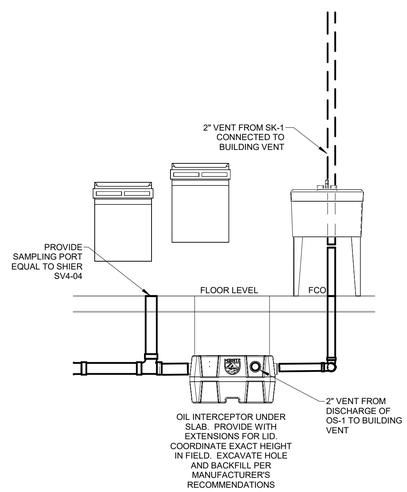

6 / P2.03 OIL INTERCEPTOR DETAIL
1/2" = 1'-0"

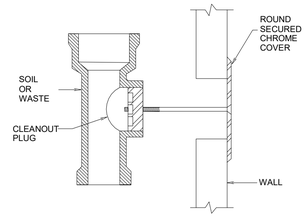

4 / P2.02 WALL CLEANOUT
NO SCALE

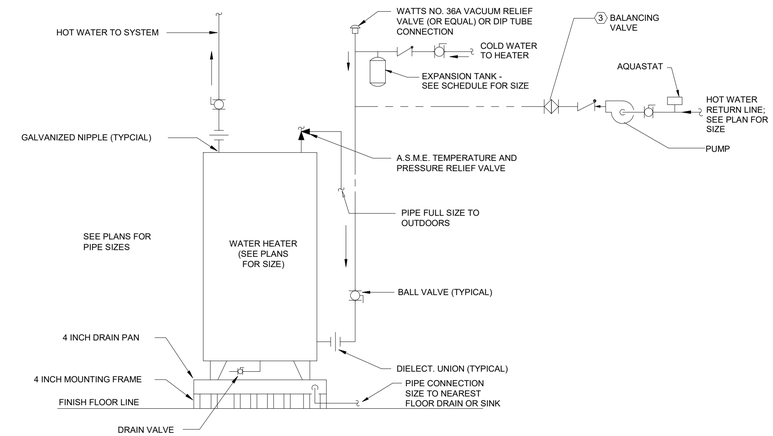

2 / P2.02 ELECTRIC WATER HEATER (FLOOR MOUNTED)
NO SCALE

Pinnacle ENGINEERING, INC.
Engineering & Design Consultants
2111 Parkway Office Circle, Suite 125
Birmingham, AL 35244
(205) 733-6912 FAX: (205) 733-6913
Job No.24207

AHO ARCHITECTS
a sole proprietorship
www.ahoarch.com

STATE OF KENTUCKY
JEFFREY BOYER
40070
PROFESSIONAL ENGINEER
10/4/24

Express Oil Change & Tire Engineers

Single Building / Right Hand Oil Change / Front Enter / Side Tire Storage

Morehead, Kentucky

FINAL

No.	Description	Date

© 2024 Aho Architects, LLC.
All Rights Reserved.

Plumbing Details

Project number	24029
Date	10/04/2024
Drawn by	CA
Checked by	JB

P2.03

Scale As indicated

10/7/2024 10:32:41 AM

LIGHTING FIXTURE SCHEDULE

TYPE	MANUFACTURER	CATALOG NUMBER	LAMPS QUANTITY	LAMPS WATTS	LAMPS TYPE	MTG. TYPE	MTG. HT.	REC. DEPTH	DESCRIPTION
L1	MAXLITE	(2)VT-4850U-40, VT-CONKIT, VT-ENDBRKT	29	100	LED	P	15'5"AFF	–	CONTINUOUS RUN OF (2) 4' LONG LINEAR LED FIXTURES WITH ALUMINUM VAPOR TIGHT HOUSING, 7600 LUMEN OUTPUT, 4000K COLOR TEMPERATURE. PROVIDE ALL REQUIRED ACCESSORIES FOR SUSPENDED MOUNTING. NOTE 1
	APPROVED EQUAL								
L2	MAXLITE	VT-4850U-40	20	50	LED	*	*	–	4' LONG LINEAR LED FIXTURE WITH ALUMINUM VAPOR TIGHT HOUSING, 5700 LUMEN OUTPUT, 4000K COLOR TEMPERATURE. L2 FIXTURES IN PIT SHALL BE SURFACE MOUNTED TO THE CEILING. L2 FIXTURES IN BAYS SHALL BE SUSPENDED FROM CEILING AT 15'5"AFF. PROVIDE ALL REQUIRED ACCESSORIES FOR BOTH MOUNTING TYPES. SEE LIGHTING PLANS FOR LOCATIONS AND QUANTITIES. NOTE 1
	APPROVED EQUAL								
L3	MAXLITE	MLFP-24E27W-CS,ML24G4FK, ML24G4CHK	2	368	LED	LI	C	–	2X4 LAY-IN LED FLAT PANEL FIXTURE WITH SELECTABLE WATTAGE, SELECTABLE COLOR TEMPERATURE, 4000 LUMEN OUTPUT, DIMMABLE DRIVER, UNIVERSAL VOLTAGE, FLANGE KIT, HANGING CABLES AND POLYSTYRENE LENS.
	APPROVED EQUAL								
L3E	MAXLITE	MLFP-24E27W-CSEM,ML24G4FK, ML24G4CHK	6	38	LED	LI	C	–	2X4 LAY-IN LED FLAT PANEL FIXTURE WITH SELECTABLE WATTAGE, SELECTABLE COLOR TEMPERATURE, 4000 LUMEN OUTPUT, DIMMABLE DRIVER, UNIVERSAL VOLTAGE, FLANGE KIT, CABLE HANGERS, POLYSTYRENE LENS. AND EMERGENCY BATTERY PACK.
	APPROVED EQUAL								
L4	MAXLITE	M40U4W-CSBWCR MVCL40-55W	5	38	LED	W	12'AFF	–	FIXED WALL MOUNTED LED FIXTURE WITH BLACK FINISH, DIE-CAST ALUMINUM HOUSING, SELECTABLE COLOR TEMPERATURE, 3512 LUMEN OUTPUT, WIDE DISTRIBUTION. UL LISTED FOR WET LOCATION. NOTE 4.
	APPROVED EQUAL								
L4E	MAXLITE	M40U4W-CSBWCREO MVCL40-55W	3	38	LED	W	12'AFF	–	FIXED WALL MOUNTED LED FIXTURE WITH BLACK FINISH, DIE-CAST ALUMINUM HOUSING, SELECTABLE COLOR TEMPERATURE, 3512 LUMEN OUTPUT, WIDE DISTRIBUTION, ELECTRONIC DRIVER, AND EMERGENCY BATTERY PACK. UL LISTED FOR WET LOCATION. NOTE 4.
	APPROVED EQUAL								
L5	PROVIDED BY GENERAL CONTRACTOR		FURNISHED WITH UNIT			R	C	–	RECESSED LED DOWNLIGHT WITH 4000K COLOR TEMPERATURE, 3000 LUMEN OUTPUT, AND EMERGENCY BATTERY PACK. UL LISTED FOR WET LOCATION. FIXTURES ARE PROVIDED BY GENERAL CONTRACTOR AS PART OF THE METAL AWNING SYSTEM.
	PROVIDED BY GENERAL CONTRACTOR								
	PROVIDED BY GENERAL CONTRACTOR								
S1	PROVIDED BY SIGN MANUFACTURER		FURNISHED WITH UNIT			W	NOTE 3	–	WALL MOUNTED LED SIGN LIGHTING FIXTURE. NOTE 2.
	PROVIDED BY SIGN MANUFACTURER								
	PROVIDED BY SIGN MANUFACTURER								
S2	PROVIDED BY SIGN MANUFACTURER		FURNISHED WITH UNIT			W	NOTE 3	–	WALL MOUNTED LED LIGHT FIXTURE. NOTE 2.
	PROVIDED BY SIGN MANUFACTURER								
	PROVIDED BY SIGN MANUFACTURER								
BL	LITHONIA	ELM6L	FURNISHED WITH UNIT			W	9'AFF	–	WALL MOUNTED TWO HEAD LED EMERGENCY FIXTURE WITH WHITE THERMOPLASTIC HOUSING, 1100 LUMEN OUTPUT, SELF DIAGNOSTICS, AND EMERGENCY BATTERY PACK.
	APPROVED EQUAL								
W1	MAXLITE	LSV2U20WCSCR	1	30	LED	W	8'AFF	–	2' LONG LINEAR LED SURFACE MOUNTED FIXTURE WITH ALUMINUM VAPOR TIGHT HOUSING, SELECTABLE WATTAGE, 4000 LUMEN OUTPUT, 4000K SELECTABLE COLOR TEMPERATURE, UNIVERSAL VOLTAGE, MOTION SENSOR AND EMERGENCY BATTERY PACK.
	APPROVED EQUAL								
XL	MAXLITE	EX-GW	FURNISHED WITH UNIT			W	AD	–	WHITE THERMOPLASTIC LED EXIT SIGN WITH SINGLE FACE, GREEN LETTERS, UNIVERSAL MOUNTING, SELF DIAGNOSTICS, AND EMERGENCY BATTERY PACK.
	APPROVED EQUAL								

ABBREVIATIONS: LI–LAY–IN C–CEILING LG–LENS GASKETING GMF–INTERNAL SLOW BLOW FUSE FL–FLUORESCENT MH–METAL HALIDE HO–HIGH OUTPUT
AFF–ABOVE FINISH FLOOR P–PENDENT FC–FROM CEILING R–RECESSED AM–ABOVE MIRROR W–WALL AD–ABOVE DOOR
S–SURFACE DTT–DOUBLE TWIN TUBE FLUORESCENT CA–CANOPY TC–TOP OF METAL CANOPY AW–ABOVE WINDOW VA–VERIFY WITH ARCHITECT

LIGHTING FIXTURE SCHEDULE GENERAL NOTES:

1. FIXTURE OUTLET BOX LOCATIONS SHOWN ON THE DRAWINGS ARE DIAGRAMMATIC AND APPROXIMATE IN LOCATION. EXACT POSITION OF THE OUTLET BOX SHALL DEPEND ON THE FIXTURE AND THE MOUNTING DETAIL.
2. MOUNTING AND SUPPORT DETAILS FOR LIGHTING FIXTURES SHALL BE SUBMITTED TO AND APPROVED BY THE ENGINEER BEFORE THE FIXTURES ARE INSTALLED. NO COMBUSTIBLE MATERIALS SHALL BE USED.
3. WET LOCATION FIXTURES SHALL BE MOUNTED IN ACCORDANCE WITH THE MANUFACTURER'S RECOMMENDATION SO AS TO ENSURE THE PREVENTION OF MOISTURE FROM ENTERING THE FIXTURE. IN ADDITION, EACH CONDUIT ENTRY WILL BE SEALED BY USE OF AN APPROVED SWEDGE FITTING WITH A NEOPRENE SEAL, AS MANUFACTURED BY JOHN REMKE COMPANY OR APPROVED EQUAL.
4. OUTLET BOXES SERVING WET LOCATION FIXTURE SHALL BE CODE SIZE, WITH A WATERTIGHT SOLID CAST TOP. CONDUIT ENTRIES SHALL BE THREADED.
5. FIXTURE MOUNTING HEIGHTS IN SCHEDULE ARE TYPICAL UNLESS NOTED OTHERWISE ON DRAWINGS.
6. FOR LIGHTING PACKAGE PRICING, CONTACT THE FOLLOWING:

   MIKE MCMAKEN
   REXEL ENERGY SOLUTIONS
   (M) 906–235–2979
   MIKE.MCMAKEN@REXELENERGY.COM

   STEPHEN MITCHELL
   MAXLITE
   (M) 908–256–3115
   SMITCHELL@MAXLITE.COM

LIGHTING FIXTURE SCHEDULE NOTES:

1. SEE MOUNTING DETAIL ON THIS SHEET FOR MORE INFORMATION.
2. INSTALLED BY SIGN COMPANY.
3. VERIFY MOUNTING HEIGHT WITH SIGN COMPANY BEFORE ROUGHING IN.
4. FIXTURE SHALL BE MOUNTED SO THAT THE TOP OF THE FIXTURE IS AT 12' AFF TO ALIGN WITH BANDING ON EXTERIOR OF BUILDING.

GENERAL NOTES:

1. VERIFY ALL DOOR SWINGS WITH ARCHITECTURAL BEFORE ROUGHING IN LIGHT SWITCHES TO ENSURE PROPER SWITCH LOCATION. VERIFY ALL CASEWORK DETAILS TO ENSURE THAT ALL OUTLETS ABOVE CASEWORK ARE AT THE PROPER HEIGHT.
2. SERVICE TO THE BUILDING SHALL BE 120/240 VOLTS, 1PHASE, 3WIRE.
3. ALL CONDUIT SHALL BE RUN CONCEALED UNLESS SPECIFICALLY SHOWN EXPOSED, OR INSTALLED IN EXPOSED CEILING.
4. THE CONTRACTOR SHALL CHECK ALL LIGHTING FIXTURES FOR EXACT TYPE MOUNTING AND SPACE REQUIRED BEFORE ROUGHING IN.
5. THE CONTRACTOR SHALL WORK CLOSELY WITH THE GENERAL CONTRACTOR AND VERIFY EXACT TYPE OF EQUIPMENT TO BE INSTALLED AND THE DIMENSIONS WHICH MAY AFFECT THE EXACT PLACEMENT OF ELECTRICAL WORK.
6. VERIFY THE EXACT LOCATION OF ALL MOTORS AND EQUIPMENT BEFORE ROUGHING IN. LIKEWISE APPRAISE ALL TRADES OF THE LOCATIONS OF ELECTRICAL WORK THAT AFFECTS WALL THICKNESS, PLUMBING, MECHANICAL, ETC.
7. ALL CONDUIT STUBBED OUT FOR FUTURE SHALL BE CAPPED AND HAVE LOCATION MARKED WITH A 2" SQUARE, PAINTED RED, WITH CONDUIT NAME AND SIZE SHOWN IN WHITE.
8. ALL BRANCH CIRCUITS AND FEEDERS SHALL HAVE AN INSULATED GROUND WIRE PULLED IN THE CONDUIT WITH CURRENT CONDUCTOR UNLESS SPECIFICALLY NOTED OTHERWISE ON THE PLANS. THE GROUNDING CONDUCTOR SHALL BE SIZED ACCORDING TO TABLE 250–122 OF THE LATEST EDITION OF THE NATIONAL ELECTRICAL CODE UNLESS INDICATED TO BE LARGER IN THE SPECIFICATIONS OR PLANS.
9. DO ALL WORK IN COMPLIANCE WITH ALL APPLICABLE CODES, LAWS AND ORDINANCES, THE NATIONAL ELECTRICAL CODE (HEREINAFTER REFERRED TO AS "CODE" OR "NEC"), THE AMERICANS WITH DISABILITIES ACT, AND THE REGULATIONS OF THE LOCAL AUTHORITIES HAVING JURISDICTION AND, WHERE APPLICABLE, UTILITY COMPANIES. OBTAIN AND PAY FOR ANY AND ALL REQUIRED PERMITS, INSPECTIONS, CERTIFICATES OF INSPECTIONS AND APPROVAL, AND THE LIKE, AND DELIVER SUCH CERTIFICATES TO THE OWNER.
10. THE MAIN SERVICE SHALL HAVE THE GROUNDED CONDUCTOR (NEUTRAL) GROUNDED TO THE GROUNDING ELECTRODE SYSTEM AT THE SUPPLY SIDE OF THE SERVICE DISCONNECTING MEANS BY A GROUNDING ELECTRODE CONDUCTOR NOT SMALLER THAN THAT SHOWN IN TABLE 250–66 OF THE NEC. THE GROUNDED CONDUCTOR (NEUTRAL), THE GROUNDING ELECTRODE CONDUCTOR, AND THE EQUIPMENT GROUNDING CONDUCTOR CONNECTIONS SHALL BE MADE INSIDE THE SERVICE ENTRANCE EQUIPMENT.
11. ALL CONDUCTORS SHALL BE COPPER, EXCEPT AS SHOWN ON DRAWINGS.
12. MINIMUM CONDUCTOR SIZE SHALL BE #12.
13. ALL CONDUIT INSTALLED INDOORS SHALL BE EMT, OTHERWISE SHALL BE IMC.
14. SWITCH AND RECEPTACLE COVER PLATES SHALL BE STAINLESS STEEL.
15. ALL DEVICES SHALL BE GRAY.
16. ALL FUSES SHALL BE DUAL ELEMENT, TIME DELAY, RATED 100,000 AIC.
17. ALL DISCONNECT SWITCHES SHALL BE HEAVY DUTY TYPE.
18. ALL CONDUCTORS SHALL BE DUAL RATED THHN/THWN TYPE INSULATION.
19. GUTTERS (WIREWAYS) SHALL BE SIZED AS SHOWN OR AS REQUIRED BY CODE. ALL GUTTERS SHALL HAVE HINGED COVERS WITH APPROVED FASTENING DEVICES & SHALL BE A STANDARD MANUFACTURED ITEM WITH U.L. LABEL. GUTTERS FROM AC DUCT MATERIAL ARE NOT ACCEPTABLE. GUTTERS SHALL BE AS MANUFACTURED BY HOFFMAN, SQUARE "D", B & C OR APPROVED EQUAL. GUTTER TAPS SHALL BE ILSCO TYPE GTA OF PTA WITH GTC OR PTC INSULATING COVERS.
20. IT SHALL BE THE RESPONSIBILITY OF THIS CONTRACTOR, PRIOR TO BID, TO REAFFIRM WITH THE UTILITY COMPANIES INVOLVED, THAT THE LOCATION, ARRANGEMENT (AND THE POWER COMPANY: VOLTAGE, PHASE & METERING REQUIRED) AND CONNECTIONS AT THE UTILITY SERVICE ARE IN ACCORDANCE WITH THEIR REGULATIONS & REQUIREMENTS. IF THEIR REQUIREMENTS ARE AT A VARIANCE WITH THESE DRAWINGS & SPECIFICATIONS, THE CONTRACT PRICE SHALL INCLUDE ANY ADDITIONAL COST NECESSARY TO MEET THOSE REQUIREMENTS WITHOUT EXTRA COST TO THE OWNER AFTER A CONTRACT HAS BEEN ENTERED INTO.
21. ON MANY PROJECTS, THE UTILITY COMPANY MAY LEVY CHARGES DUE TO LOCATION, SIZE OR TYPE OF SERVICE INVOLVED. THE CONTRACTOR SHALL BE RESPONSIBLE FOR THESE CHARGES, UNLESS SUCH CHARGES ARE NOT AVAILABLE PRIOR TO BID & CONTRACTOR SO DOCUMENTS AT BID OPENING. SHOULD THE THE COST NOT BE AVAILABLE, PRIOR TO BID, THE CONTRACTOR SHALL SUBMIT A LETTER SO STATING WITH HIS BID.
22. ARRANGE WITH UTILITY COMPANIES FOR SUCH SERVICE AS SHOWN OR HEREIN SPECIFIED & INSTALLATION OF METER WHERE SHOWN. FURNISH WITH SHOP DRAWINGS, A SIGNED DOCUMENT FROM UTILITY COMPANIES DESCRIBING THE LOCATION & TYPE OF SERVICES TO BE FURNISHED AND ANY REQUIREMENTS THEY MAY HAVE. THIS DOCUMENT SHALL BE SIGNED FOR EACH UTILITY COMPANY BY A PERSON RESPONSIBLE FOR GRANTING SUCH SERVICES.
23. PAY ALL CHARGES (IF ANY) IN CONNECTION THEREWITH, INCLUDING PERMANENT METER DEPOSIT. METER DEPOSIT WILL BE REFUNDED TO THE CONTRACTOR AT TIME OF OWNER'S ACCEPTANCE.

NOTES:

1. JUNCTION BOX FOR L1 & L2 FIXTURES SHALL BE SURFACE MOUNTED ON CEILING.

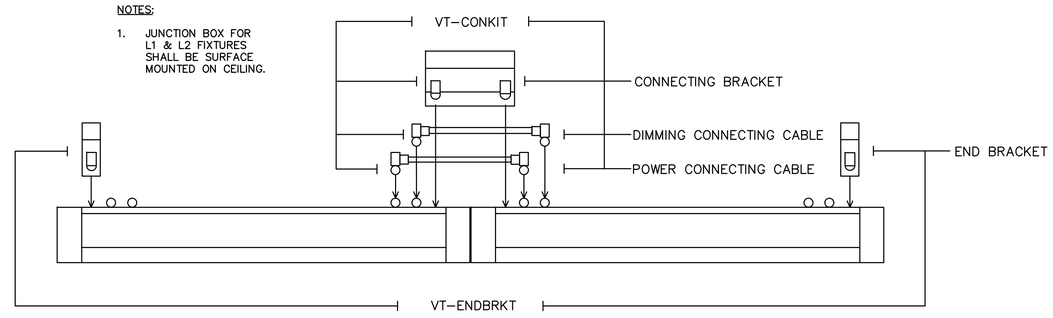

DETAIL
FIXTURE "L1" MOUNTING
NOT TO SCALE

GIDEON WAMAE, P.E.

4120 OVERLOOK CIRCLE, TRUSSVILLE, AL 35173
GWAMAE@GW-ENG.COM | 205.413.4112

AHO ARCHITECTS
a sole proprietorship
www.ahoarch.com

STATE OF KENTUCKY
GIDEON WAMAE
39747
LICENSED PROFESSIONAL ENGINEER
10/14/24

Express Oil Change & Tire Engineers
Single Building / Right Hand Oil Change / Front Enter / Side Tire Storage
Morehead, Kentucky

FINAL

No.	Description	Date

© 2024 Aho Architects, LLC.
All Rights Reserved.

General Notes & Fixture Schedules

Project number	24029
Date	10/04/2024
Drawn by	TH
Checked by	GW

E100

Scale NO SCALE

10/7/2024 11:32:23 AM

GRAPHICAL ELECTRICAL SYMBOLS

BRANCH CIRCUIT SYMBOLS

	BRANCH CIRCUIT	HOMERUN TO 20A, 1POLE CIRCUIT BREAKER IN PANELBOARD OR DEVICE NOTED. WIRE SIZE IS 2#12&1#12GRD–3/4"C.
	BRANCH CIRCUIT	CONCEALED IN CEILING OR WALL.
	BRANCH CIRCUIT	CONCEALED IN FLOOR.
EX	BRANCH CIRCUIT	EXISTING CONDUIT BARS DENOTE NEW CONDUCTORS.
	BRANCH CIRCUIT	EXPOSED.
	BRANCH CIRCUIT	RISER UP.
	BRANCH CIRCUIT	RISER DOWN.

BRANCH CIRCUIT NOTES

	BRANCH CIRCUIT	3#12&1#12GRD–3/4"C
	BRANCH CIRCUIT	4#12&1#12GRD–3/4"C
10	BRANCH CIRCUIT	2#10&1#10GRD–3/4"C
10	BRANCH CIRCUIT	3#10&1#10GRD–3/4"C

SIZE CONDUIT PER NEC FOR GREATER NUMBER OF CONDUCTORS OR AS NOTED. THE NUMBER IN THE CIRCUIT INDICATES AWG WIRE SIZE AND THE HASHMARKS INDICATE THE NUMBER OF WIRES REQUIRED. EQUIPMENT GROUND CONDUCTOR SHALL BE SIZED IN ACCORDANCE WITH NEC TABLE 250–122. THE NUMBER OF HASH MARKS DO NOT INCLUDE EQUIPMENT GROUNDING CONDUCTOR.

GENERAL SYMBOLS

J	JUNCTION BOX.
J	WALL MOUNTED JUNCTION BOX.
J	WALL MOUNTED JUNCTION BOX WITH FLEXIBLE CONNECTION TO EQUIPMENT.
TV	ONE GANG BOX WITH 3/4"C. STUB UP ABOVE ACCESSIBLE CEILING WITH COAXIAL CABLE AND TV JACKS.
$T	MANUAL MOTOR STARTER WITH THERMAL PROTECTION.
	SAFETY SWITCH, NON–FUSED.
	SAFETY SWITCH, FUSED.
	CIRCUIT BREAKER MOUNTED IN NEMA 1 ENCLOSURE UNLESS NOTED OTHERWISE
	LIGHTING PANEL AND/OR RECEPTACLE PANEL.
	POWER PANEL.
TR	TRANSFORMER.
	GROUND.

GENERAL ABBREVIATIONS

H	MOUNTING HEIGHT ABOVE FINISHED FLOOR.
AF	ABOVE FINISHED FLOOR.
WP	WEATHER PROOF – NEMA 3R
RT	RAIN TIGHT – NEMA 4.
EP	EXPLOSION PROOF.
TP	TAMPER PROOF.
A	MOUNT ABOVE COUNTER.
BC	MOUNT BELOW COUNTER.
F	FLUSH MOUNTED.
SLD	SEE SINGLE LINE DIAGRAM.
GFI	GROUND FAULT INTERRUPTING.
C	CONDUIT.
EC	EMPTY CONDUIT
GC	FLEXIBLE CONDUIT.
SFC	SEALTITE FLEXIBLE CONDUIT.
EMT	ELECTRICAL METALLIC TUBING.
IMC	INTERMEDIATE METALLIC CONDUIT.
RG	RIGID CONDUIT.
PVC	NONMETALLIC RIGID CONDUIT.
EX	EXISTING.
XR	EXISTING TO BE REMOVED
RL	EXISTING TO BE REMOVED AND RELOCATED.
RQ	EXISTING TO BE REMOVED. EXTEND CIRCUIT CONDUCTORS AS REQUIRED AND INSTALL FINISHED BLANK COVER.
RR	EXISTING TO BE REMOVED AND REPLACED WITH NEW.
RL'D	RELOCATED POSITION.
EM	EMERGENCY BATTERY PACK

LIGHTING FIXTURE & CONTROL SYMBOLS

1A	CEILING OUTLET	FIXTURE TYPE "A" CIRCUIT #1.
	CEILING OUTLET	EXISTING.
	CEILING OUTLET	FLUORESCENT FIXTURE, SINGLE OR CONTINUOUS, LENGTHS AS SHOWN.
	CEILING OUTLET	FLUORESCENT STRIP.
	WALL OUTLET	BRACKET TYPE FIXTURE.
	WALL OUTLET	FLUORESCENT BRACKET TYPE FIXTURE.
$	SWITCH OUTLET	A.C. TYPE, SINGLE POLE, 20A, 125/277V.
$3	SWITCH OUTLET	A.C. TYPE, THREE WAY, 20A, 125/277V.
$4	SWITCH OUTLET	A.C. TYPE, FOUR WAY, 20A, 125/277V.
$OS	SWITCH OUTLET	180° DUAL TECH SENSOR LIGHTING MOTION DETECTOR, WALL MOUNTED. WATT STOPPER #DW–100.
PP	SWITCH OUTLET	LIGHTING MOTION DETECTOR POWER PACK. INSTALL ABOVE ACCESSIBLE CEILING.
M	SWITCH OUTLET	LIGHTING MOTION DETECTOR, CEILING MOUNTED.

SWITCH OUTLET NOTES

"a" "b" ETC.	FIXTURE CORRESPONDS TO A SWITCH DENOTED WITH THE SAME LOWER CASE LETTER.

EXIT LIGHT SYMBOLS

XL	WALL OR CEILING MOUNTED, SINGLE FACE, NO ARROW.
XL	CEILING MOUNTED, DOUBLE FACE, LEFT OR RIGHT ARROWS.
XL	WALL OR CEILING MOUNTED, SINGLE FACE, LEFT OR RIGHT ARROW.
XL	WALL OR CEILING MOUNTED, SINGLE FACE, LEFT AND RIGHT ARROWS.
XL	CEILING MOUNTED, DOUBLE FACE, LEFT AND RIGHT ARROWS.

RECEPTACLE OUTLET SYMBOLS

	WALL OUTLET	DUPLEX RECEPTACLE, 20A, 125V, 3WIRE, NEMA 5–20R.
	WALL OUTLET	DOUBLE DUPLEX RECEPTACLE, 20A, 125V, 3WIRE, NEMA 5–20R, SINGLE PLATE.
	WALL OUTLET	DUPLEX RECEPTACLE, 20A, 125V, NEMA 5–20R, GFCI, WEATHER–RESISTANT, WITH EXTRA DUTY IN–USE WEATHERPROOF COVER. HUBBELL CATALOG #GFR5362SGGY/WP8M
	WALL OUTLET	SINGLE RECEPTACLE, 20A, 250V, 3WIRE, NEMA 6–20R.
	WALL OUTLET	SINGLE RECEPTACLE, 20A, 250V, 3WIRE, NEMA L6–20R.
	FLOOR OUTLET	FLUSH MOUNTED IN–GRADE WITH DOUBLE DUPLEX RECEPTACLE, 20A, 125V, 3WIRE, NEMA 5–20R, FOUR SPACES FOR KEYSTONE CONNECTORS, AND BRUSHED BRASS COVER LEGRAND RFB4E OR EQUAL.
	CEILING OUTLET	DUPLEX RECEPTACLE, 20A, 125V, 3WIRE, NEMA 5–20R.

RECEPTACLE OUTLET NOTES

"G"	GROUND FAULT INTERRUPTER.
"GA"	GROUND FAULT INTERRUPTER, MOUNTED ABOVE COUNTER.
"A"	MOUNTED ABOVE COUNTER.
"BC"	MOUNTED BELOW COUNTER.
"DF"	FOR DRINKING FOUNTAIN.

VOICE/DATA OUTLET & CONDUIT SYMBOLS

▶	VOICE/DATA OUTLET	WALL MOUNTED, WITH 3/4" CONDUIT HOMERUN TO NEAREST TELEPHONE CABINET OR BACKBOARD UNLESS NOTED OTHERWISE.
——	VOICE/DATA OUTLET	TELEPHONE BACKBOARD – 3/4" PLYWOOD PAINTED WITH TWO COATS OF FIRE RETARDANT PAINT, 48"x96" HIGH, UNLESS SHOWN OTHERWISE.

VOICE/DATA OUTLET NOTES

"A"	MOUNTED ABOVE COUNTER.
"BC"	MOUNTED BELOW COUNTER.

NOTES:

1. INDICATED MOUNTING HEIGHTS ARE FROM FINISHED FLOOR TO CENTERLINE OF OUTLET BOX, UNLESS OTHERWISE NOTED.
2. REFER TO ARCHITECTURAL DETAILS FOR ADDITIONAL REQUIREMENTS.
3. INSTALL OUTLETS THAT ARE IN CLOSE PROXIMITY ON THE SAME CENTERLINE.
4. MOUNTING HEIGHTS SHOWN HERE ARE TYPICAL UNLESS NOTED OTHERWISE ON DRAWINGS.

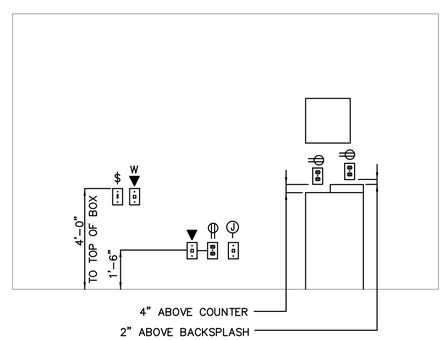

DETAIL
TYPICAL MOUNTING HEIGHTS
NOT TO SCALE

GIDEON WAMAE, P.E.

4120 OVERLOOK CIRCLE, TRUSSVILLE, AL 35173
GWAMAE@GW-ENG.COM | 205.413.4112

AHO ARCHITECTS
a sole proprietorship
www.ahoarch.com

STATE OF KENTUCKY
GIDEON WAMAE
39747
LICENSED PROFESSIONAL ENGINEER
10/4/24

Express Oil Change & Tire Engineers

Single Building / Right Hand Oil Change / Front Enter / Side Tire Storage

Morehead, Kentucky

FINAL

No.	Description	Date

© 2024 Aho Architects, LLC.
All Rights Reserved.

Symbol Legends and Details

Project number	24029
Date	10/04/2024
Drawn by	TH
Checked by	GW

E101

Scale NO SCALE

10/7/2024 11:32:23 AM

DETAIL
ARC FLASH HAZARD WARNING LABEL
NOT TO SCALE

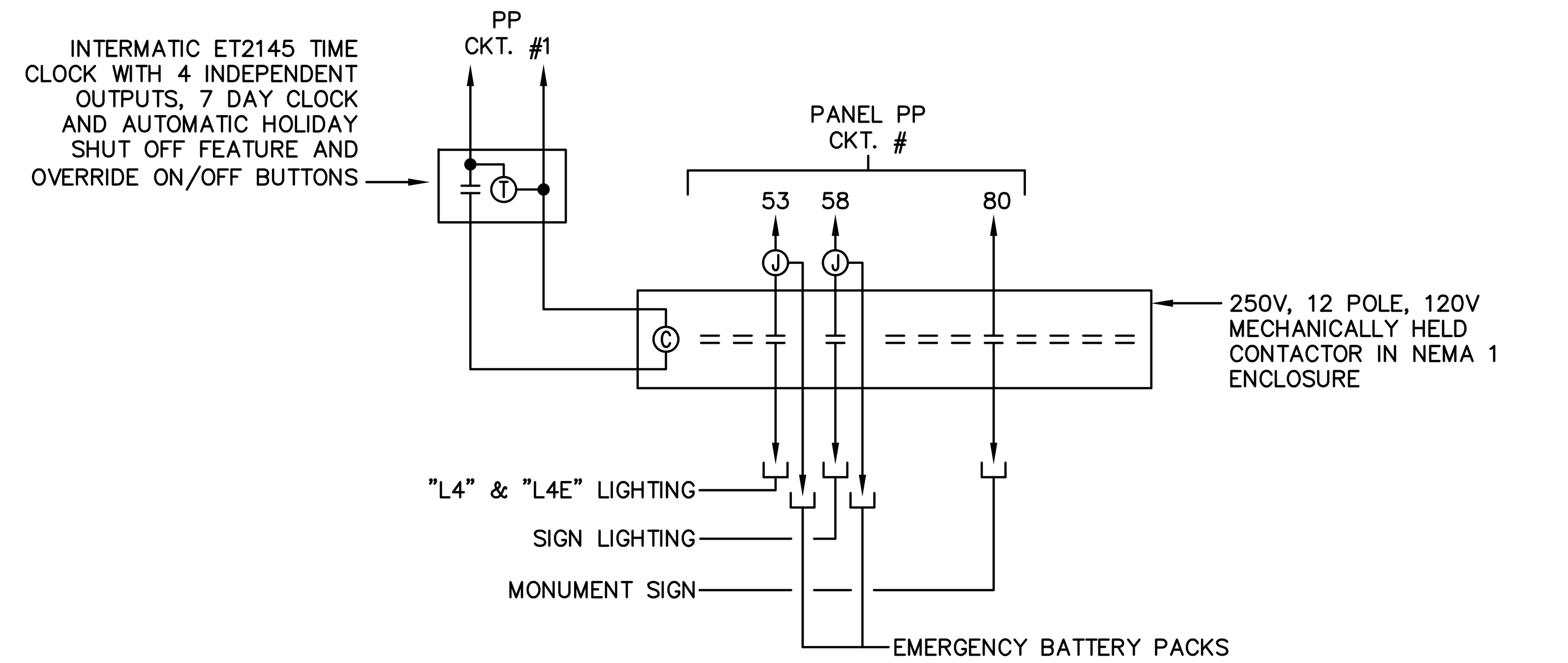

WIRING DIAGRAM
CONTACTOR C-2
NOT TO SCALE

NOTES:

1. 48"x48" FREE STANDING TELEPHONE BACKBOARD. PROVIDE ACCESS AND WORK SPACE CLEARANCE AS REQUIRED BY LOCAL TELECOM UTILITY COMPANY.
2. CONDUIT ELBOWS SHALL BE SWEEPING WITH NO HARD ANGLES.

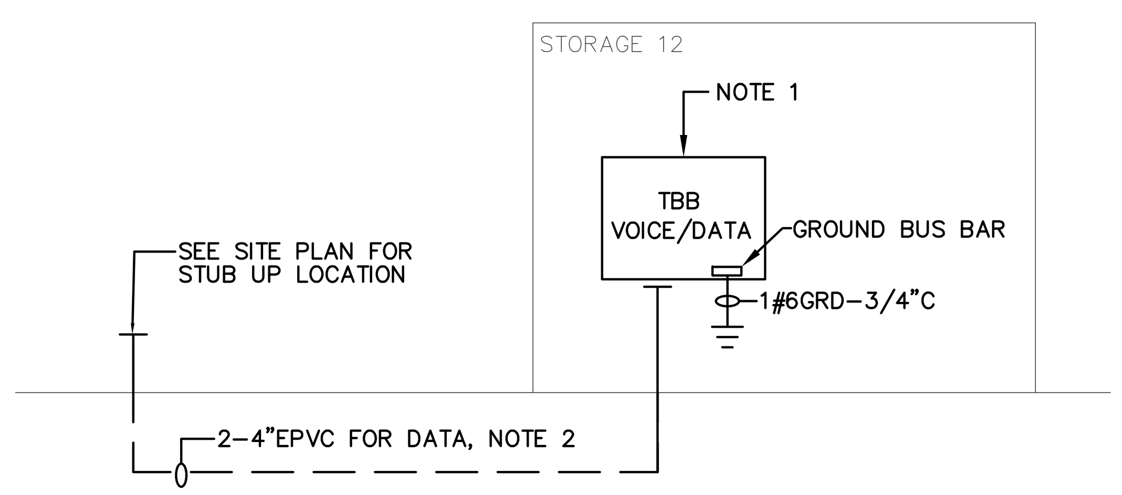

SINGLE LINE DIAGRAM
AUXILIARY
NOT TO SCALE

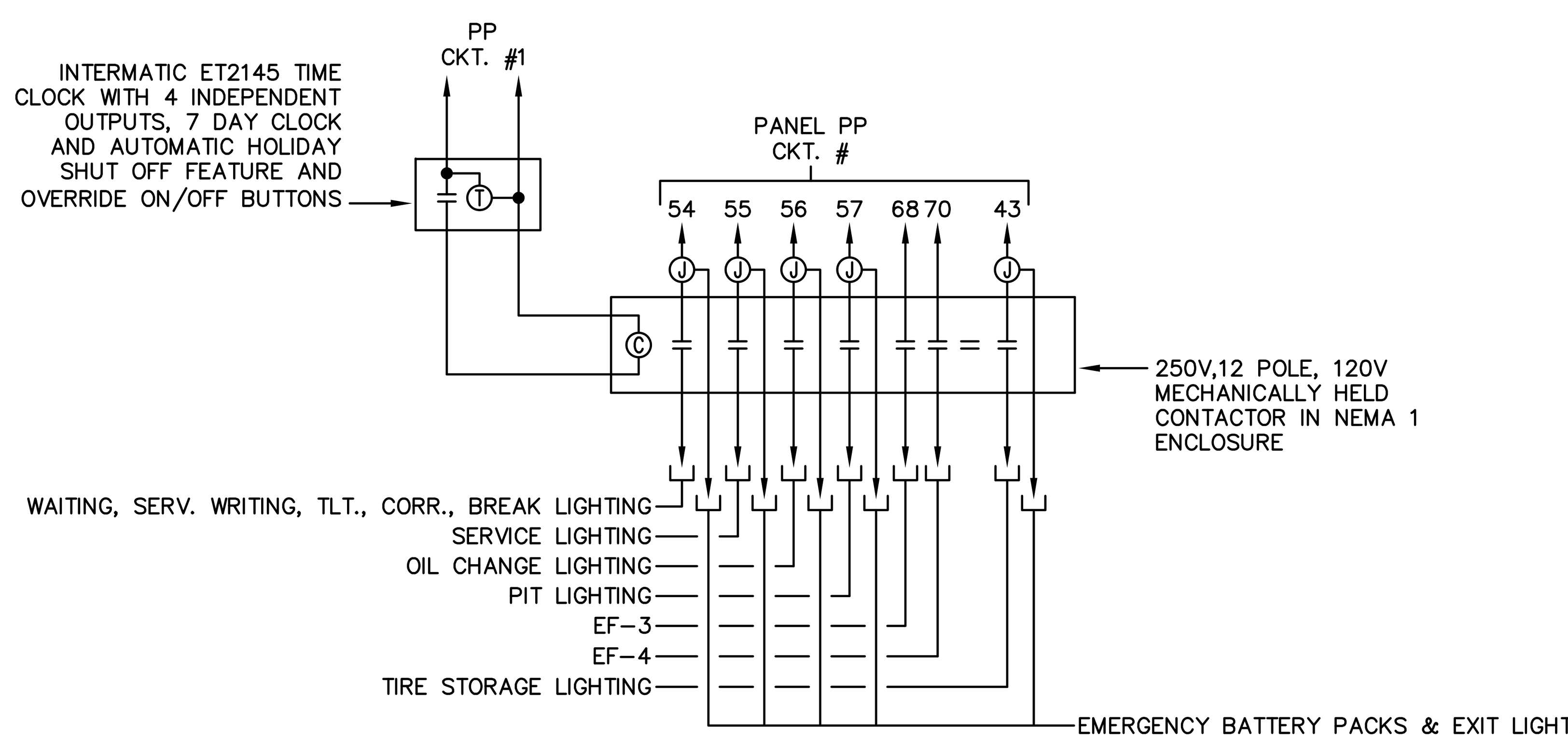

WIRING DIAGRAM
CONTACTOR C-1
NOT TO SCALE

PANEL LOAD SUMMARY

Panel: PP (SECTION I)

Equipment	LIGHT	RCPT	O/M	CB SIZE	CIRCUIT #	PHASE A	PHASE B	CIRCUIT #	CB SIZE	LIGHT	RCPT	O/M	Equipment
CONTACTOR C-1 & C-2			100	20/1	1	100		2	20/1				SPARE
OUTDOOR RECEPTACLE		200		20/1	3		800	4	20/1		600		SERVICE WRITING RECEP.
WAITING ROOM RECEP.		800		20/1	5	1600		6	20/1		800		MANAGER RECEPTACLE
TLT/CORR/BREAK RECEP.		800		20/1	7		1000	8	20/1		200		BREAK RECEPTACLE
SERVICE RECEPTACLE		400		20/1	9	600		10	20/1		200		BREAK RECEPTACLE
SERVICE RECEPTACLE		400		20/1	11		600	12	20/1		200		BREAK FRIDGE RECEPTACLE
MANAGERS RECEPTACLE		400		20/1	13	800		14	20/1		400		SERVICE RECEPTACLE
SERVICE RECEPTACLE		400		20/1	15		400	16	20/1				SPARE
TIRE CHANGER		900		20/2	17	3900		18	30/2		3000		ALIGNMENT LIFT
		900			19		3900	20			3000		
10K LIFT		1440		20/2	21	2880		22	20/2		1440		10K LIFT
		1440			23		2880	24			1440		
10K LIFT		1440		20/2	25	2880		26	20/2		1440		10K LIFT
		1440			27		2880	28			1440		
12K LIFT		1440		20/2	29	2640		30	20/2		1200		WHEEL BALANCER
		1440			31		2640	32			1200		
AIR COMPRESSOR		3360		60/2	33	3560		34	20/1		200		EQUIPMENT PLATFORM RECEP.
		3360			35		3760	36	20/1		400		SERVICE DESK RECEPT.
IRRIGATION CONTROLLER		200		20/1	37	200		38	20/1				SPARE
OIL CHANGE RECEPTACLE		600		20/1	39		1200	40	20/1		600		OIL CHANGE RECEPTACLE
PIT SUMP PUMP		200		20/1	41	400		42	20/1		200		OIL CHANGE DESK RECEP.
Sub-Total	0	21560	100			19560	20060			0	17960	0	Sub-Total

LOAD TYPE	Phase A	Phase B
	TOTAL CONNECTED LOAD PER PHASE	
LIGHTING	0.00	0.00
RECEPTACLES	19460.00	20060.00
MOTORS/OTHER	100.00	0.00
TOTAL	19560.00	20060.00

TOTAL CONNECTED LIGHTING LOAD	0.00	KVA
TOTAL CONNECTED RECEPTACLE LOAD	39.52	KVA
TOTAL CONNECTED MOTOR/OTHER LOAD	0.10	KVA
TOTAL CONNECTED LOAD	39.62	KVA

* Diversified per NEC Table 220.44.

ENCLOSURE	NEMA 1
MOUNTING	SURFACE
MAIN TYPE	ML
SIZE	400A
FEED THRU	YES
FEED	BOTTOM
BUS RATING	400A
SERVICE RATED	NO
MIN FULL EQUIP KAIC RATING	22
TYPE	LOAD CENTER
MANUFACTURER	
OTHER	

VOLTS 120/ 240 V 1 Phase, 3 Wire & Grd Bus Bar

PANEL LOAD SUMMARY

Panel: PP (SECTION II)

Equipment	LIGHT	RCPT	O/M	CB SIZE	CIRCUIT #	PHASE A	PHASE B	CIRCUIT #	CB SIZE	LIGHT	RCPT	O/M	Equipment
STORAGE LIGHTING	800			20/1	43	1000		44	20/1		200		OIL CHANGE DESK RECEP.
OIL CHANGE DESK RECEP.		200		20/1	45		400	46	20/1		200		OIL CHANGE DESK RECEP.
SPARE				20/1	47	0		48	20/1				SPARE
PIT RECEPTACLE		600		20/1	49		800	50	20/1		200		PIT RECEPTACLE
ELECTRIC DRAIN SYSTEM		400		20/1	51	800		52	20/1		400		TBB RECEPTACLE
EXTERIOR LIGHTING	150			20/1	53		470	54	20/1	320			S.WRIT./WAIT/TLT/BRK LTG./EQUIP. PLATFORM/EF1&2
SERVICE LIGHTING	1638			20/1	55	2366		56	20/1	728			OIL CHANGE LIGHTING
PIT LIGHTING	540			20/1	57		1890	58	20/1	1350			SIGN LIGHTING
SPARE	400			20/1	59	400		60	20/1				SPARE
FUTURE EV CHARGER				50/2	61		50	62	20/1			50	REC-1
					63	1680		64	25/2			1680	CU-1
SPARE	500			20/1	65		2180	66				1680	
EWH-1			2250	25/2	67	3906		68	20/1			1656	EF-3
			2250		69		3906	70	20/1			1656	EF-4
UH-1 & UH-2			800	20/1	71	1000		72	20/1		200		EXTERIOR RECEPTACLE
UH-4 & UH-4			800	20/1	73		1850	74	15/1			1050	GFF-1
DRINKING FOUNTAIN		200		20/1	75	200		76	20/1				SPARE
SPARE				20/1	77		400	78	20/1		400		LOT BELL
SPARE				20/1	79	100		80	20/1			100	MONUMENT SIGN
LIFT RECEPTACLE		600		20/1	81		600	82	20/1				SPARE
LIFT RECEPTACLE		600		20/1	83			84	20/1				SPARE
Sub-Total	4028	2600	6100			11452	12546			2398	1600	7872	Sub-Total

LOAD TYPE	Phase A	Phase B		DEMAND FACTOR	Phase A	Phase B
	TOTAL CONNECTED LOAD PER PHASE				DEMAND LOAD (VA)	
LIGHTING	3566.00	2860.00		1.25	4457.50	3575.00
RECEPTACLES	20860.00	22260.00		*	12930.00	13630.00
MOTORS/OTHER	6586.00	7486.00		1.00	6586.00	7486.00
TOTAL	31012.00	32606.00			23973.50	24691.00

TOTAL CONNECTED LIGHTING LOAD	6.43	KVA
TOTAL CONNECTED RECEPTACLE LOAD	4.20	KVA
TOTAL CONNECTED MOTOR/OTHER LOAD	13.97	KVA
TOTAL CONNECTED LOAD	24.60	KVA

* Diversified per NEC Table 220.44.

WIRE SIZE CALCULATIONS

LARGEST PHASE DEMAND	24.69	KVA
NO. OF PHASES	2.00	
DEMAND LOAD	49.38	KVA
TOTAL DEMAND LOAD	49.38	KVA
SUPPLY VOLTAGE	240.00	V
DEMAND AMPS	205.76	AMPS
MINIMUM CCT AMPS	205.76	AMPS

ENCLOSURE	NEMA 1
MOUNTING	SURFACE
MAIN TYPE	ML
SIZE	400A
FEED THRU	NO
FEED	TOP
BUS RATING	400A
SERVICE RATED	NO
MIN FULL EQUIP KAIC RATING	22
TYPE	LOAD CENTER
MANUFACTURER	
OTHER	

VOLTS 120/ 240 V 1 Phase, 3 Wire & Grd Bus Bar

GENERAL NOTES:

1. COORDINATE SERVICE SECONDARY FROM UTILITY TRANSFORMER TO METER WITH POWER COMPANY BEFORE BID AND PRICING. PROVIDE PER POWER COMPANY REQUIREMENTS.
2. EQUIPMENT WITH ALUMINUM FEEDERS SHALL BE PROVIDED WITH DUAL RATED TERMINALS.
3. PROVIDE 120/240V, 1Ø, 400A, UNDERGROUND SERVICE.
4. PROVIDE 2"X3" ENGRAVED LABEL WITH BLUE LETTERING INDICATING MAXIMUM AVAILABLE FAULT CURRENT AND DATE OF CALCULATION.
5. SERVICE DISCONNECT SHALL BE MOUNTED SUCH THAT CENTER OF OPERATING HANDLE SHALL NOT BE LESS THAN 4' AND NOT MORE THAN 6'-7" ABOVE GRADE.

NOTES:

1. SERVICE ENTRANCE RATED DISCONNECT SWITCH, NEMA 3R ENCLOSURE
2. COORDINATE METERING WITH POWER COMPANY BEFORE ROUGHING IN.

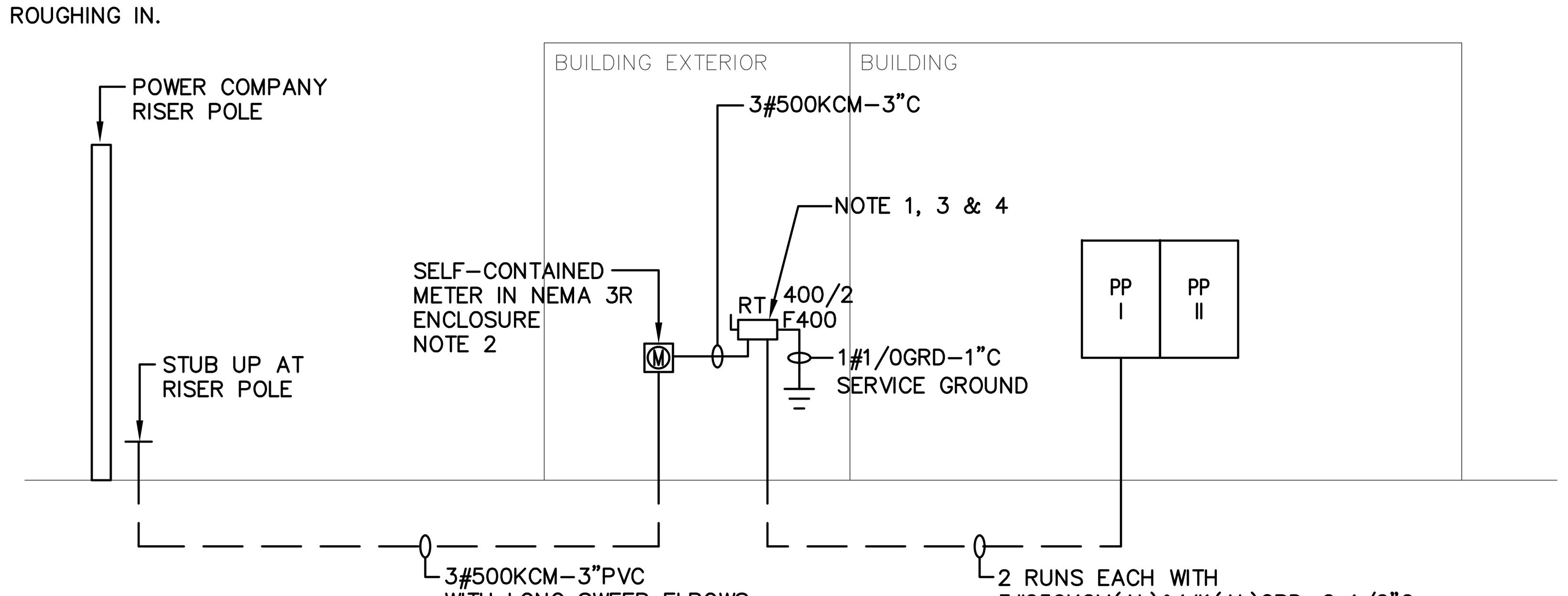

SINGLE LINE DIAGRAM
POWER
NOT TO SCALE

EQUIPMENT ELECTRICAL REQUIREMENTS SCHEDULE

EQUIPMENT	LOCATION	KW	HP	AMP	CIRCUIT BREAKER	DISCONNECT SWITCH/FUSE	CONDUCTORS & CONDUIT	VOLTAGE	CONNECTION
(4) 10K LIFT	SERVICE 11	–	2	12.0	20/2	–	2#12&1#12GRD–3/4"C	240V,1Ø	HARDWIRED
12K LIFT	SERVICE 11	–	2	12.0	20/2	–	2#12&1#12GRD–3/4"C	240V,1Ø	HARDWIRED
AIR COMPRESSOR	STORAGE 12	–	5	28.0	60/2	60/2, F40	2#8&1#10GRD–3/4"C	240V,1Ø	HARDWIRED
TIRE CHANGER	WORK ROOM 9	–	–	6.0	20/2	30/2	2#12&1#12GRD–3/4"C	240V,1Ø	HARDWIRED
WHEEL BALANCER	WORK ROOM 9	–	–	20.0	20/2	30/2	2#12&1#12GRD–3/4"C	240V,1Ø	HARDWIRED
ALIGNMENT LIFT	SERVICE 11	–	–	26.0	30/2	30/2, F30	2#10&1#10GRD–3/4"C	240V,1Ø	HARDWIRED

NOTES:

1. CONTRACTOR SHALL COORDINATE REQUIREMENTS SHOWN HERE WITH OWNER BEFORE ROUGHING IN. PROVIDE ELECTRICAL PER OWNER EQUIPMENT VENDOR REQUIREMENTS.

GIDEON WAMAE, P.E.
4120 OVERLOOK CIRCLE, TRUSSVILLE, AL 35173
GWAMAE@GW-ENG.COM | 205.413.4112

AHO ARCHITECTS
a sole proprietorship
www.ahoarch.com

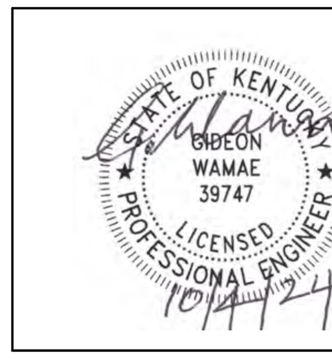

Express Oil Change & Tire Engineers
Single Building / Right Hand Oil Change / Front Enter / Side Tire Storage
Morehead, Kentucky

FINAL

No.	Description	Date

© 2024 Aho Architects, LLC. All Rights Reserved.

Single Line Diagram & Panelboard Schedules

Project number	24029
Date	10/04/2024
Drawn by	TH
Checked by	GW

E102

Scale NO SCALE

10/7/2024 11:32:23 AM

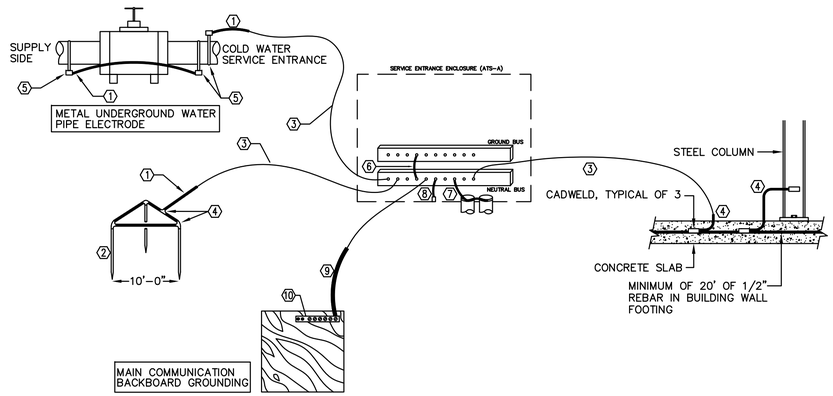

GROUNDING SYSTEM DETAIL
NOT TO SCALE

GROUNDING SYSTEM DETAIL – KEY NOTES

1. 4/0 BARE GROUNDING ELCTRODE CONDUCTOR.
2. 3/4"x10'-0" CLAD STEEL GROUND ROD, DRIVEN 24" BELOW GRADE, MINIMUM.
3. 4/0 BARE GROUNDING ELECTRODE CONDUCTOR IN 2"PVC-40.
4. EXOTHERMIC WELD CONNECTOR:
   TWO CABLES TO GROUND ROD, CADWELD #GT OR #GY
   CABLE TO CABLE TEE, CADWELD #TA
   ONE CABLE TO GROUND ROD, CADWELD #GR
5. CAST BRONZE, UL LISTED GROUND CLAMP, O-Z/GEDNEY TYPE-G.
6. BONDING JUMPER, SIZED BY EQUIPMENT MANUFACTURER PER NEC 250-66.
7. BONDING JUMPER TO GROUNDING BUSHING. AND BONDING JUMPERS FROM CONDUIT TO CONDUIT. ALL CONDUIT CONNECTED TO THE SERVICE ENTRANCE ENCLOSURE SHALL BE BONDED, SIZED PER NEC 250.
8. MAIN BONDING JUMPER, SIZED BY MANUFACTURER PER 250-66.
9. 4/0 BARE BONDING JUMPER.
10. 6 CONDUCTOR GROUND BUS, COPPER OR ALUMINUM RATED, ILSCO #PDE.

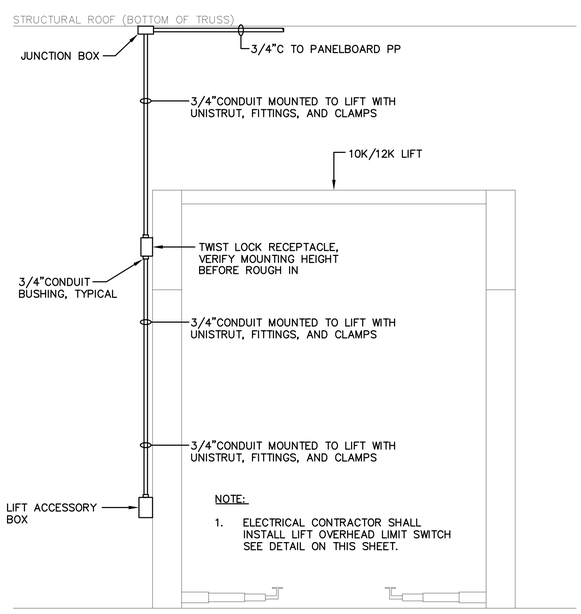

ELEVATION
LIFT POWER DETAIL
NOT TO SCALE

TYPICAL FEEDER DESIGNATION

_#_ & 1#_GRD – _C (_A/_P)

- NUMBER OF CIRCUIT CONDUCTORS
- SIZE OF CIRCUIT CONDUCTORS "AWG UNLESS NOTED kCMIL"
- SIZE OF GROUNDING CONDUCTOR
- SIZE OF CONDUIT
- PROTECTIVE DEVICE TO WHICH THE CIRCUIT IS CONNECTED

NOTE:

1. CONDUCTOR INSULATION TO BE 600V UNLESS OTHERWISE INDICATED.

TYPICAL LUMINAIRE, DEVICE AND CIRCUIT DESIGNATIONS

a(R)1	LUMINAIRE TYPE 'R', CIRCUIT NO. 1, CONTROLLED BY SWITCH "a"
2[A]b	FLUORESCENT LUMINAIRE TYPE 'A', CIRCUIT NO. 2, CONTROLLED BY SWITCH "b"
2	WALL OUTLET WITH RECEPTACLE NOTED, CONNECT TO CIRCUIT NO. 2
1J	EQUIPMENT CONNECTION – CONNECT TO CIRCUIT NO. 1

DETAIL
WIRING DESIGNATION
NOT TO SCALE

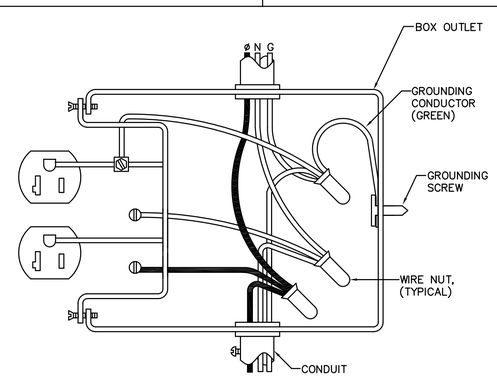

DETAIL
RECEPTACLE INSTALLATION
NOT TO SCALE

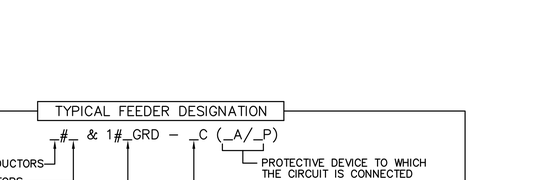

DETAIL
AVAILABLE FAULT CURRENT NAMEPLATE
NOT TO SCALE

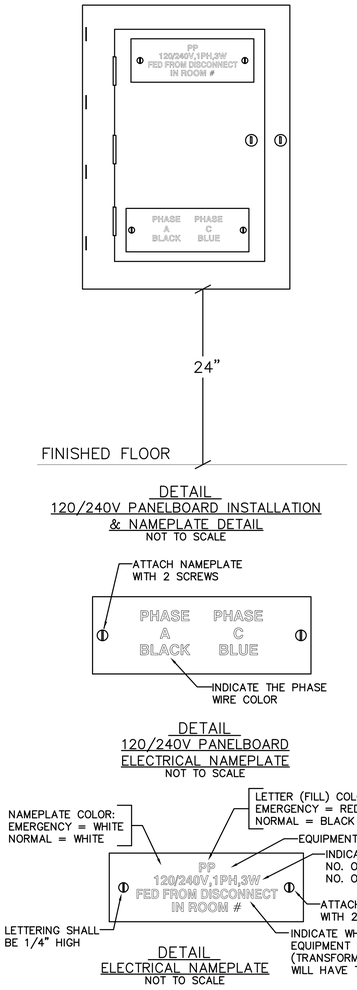

DETAIL
120/240V PANELBOARD INSTALLATION & NAMEPLATE DETAIL
NOT TO SCALE

DETAIL
120/240V PANELBOARD ELECTRICAL NAMEPLATE
NOT TO SCALE

DETAIL
ELECTRICAL NAMEPLATE
NOT TO SCALE

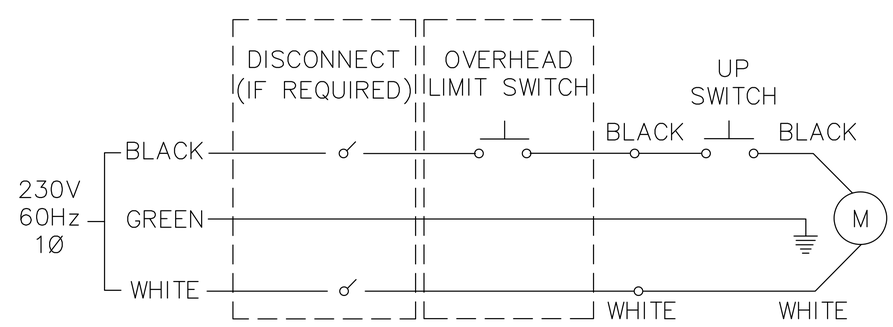

LIFT LIMIT SWITCH
WIRING DETAIL
NOT TO SCALE

GIDEON WAMAE, P.E.

4120 OVERLOOK CIRCLE, TRUSSVILLE, AL 35173
GWAMAE@GW-ENG.COM | 205.413.4112

AHO ARCHITECTS
a sole proprietorship
www.ahoarch.com

STATE OF KENTUCKY
GIDEON WAMAE
39747
LICENSED PROFESSIONAL ENGINEER
10/7/24

Express Oil Change & Tire Engineers
Single Building / Right Hand Oil Change / Front Enter / Side Tire Storage
Morehead, Kentucky

FINAL

No.	Description	Date

© 2024 Aho Architects, LLC.
All Rights Reserved.

Details

Project number	24029
Date	10/04/2024
Drawn by	TH
Checked by	GW

E103

Scale NO SCALE

10/7/2024 11:32:23 AM

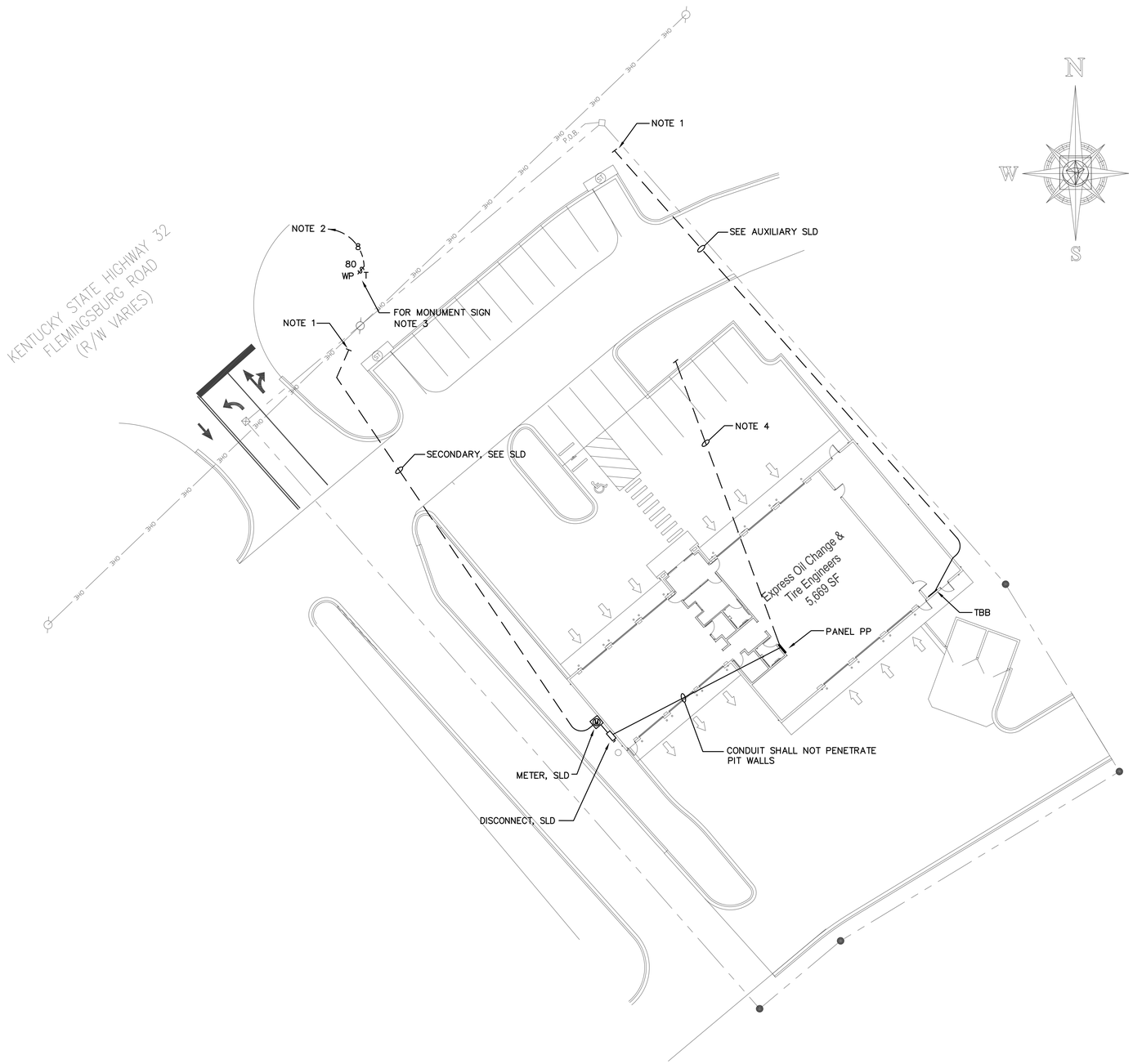

1 Site Plan - Electrical
1" = 20'-0"

NOTES:

1. VERIFY EXACT LOCATION OF STUB UP BEFORE ROUGH IN.
2. HOMERUN TO PANELBOARD PP THROUGH LIGHTING CONTACTOR C-2.
3. LOCATION OF MONUMENT SIGN SHOWN HERE IS FOR REFERENCE ONLY. VERIFY EXACT LOCATION OF MONUMENT SIGN WITH CIVIL PRIOR TO ROUGH IN.
4. PROVIDE 1-1" EMPTY CONDUIT. HOMERUN TO PANEL PP FOR FUTURE EV CHARGING STATION. VERIFY EXACT LOCATION OF STUB UP WITH ARCHITECT AND CIVIL PRIOR TO INSTALLATION.

GIDEON WAMAE, P.E.

4120 OVERLOOK CIRCLE, TRUSSVILLE, AL 35173
GWAMAE@GW-ENG.COM | 205.413.4112

AHO ARCHITECTS
a sole proprietorship
www.ahoarch.com

STATE OF KENTUCKY
GIDEON WAMAE
39747
LICENSED PROFESSIONAL ENGINEER
10/14/24

Express Oil Change & Tire Engineers

Single Building / Right Hand Oil Change / Front Enter / Side Tire Storage

Morehead, Kentucky

FINAL

No.	Description	Date

© 2024 Aho Architects, LLC.
All Rights Reserved.

Site Plan - Electrical

Project number	24029
Date	10/04/2024
Drawn by	TH
Checked by	GW

E104

Scale 1" = 20'-0"

10/7/2024 11:32:23 AM

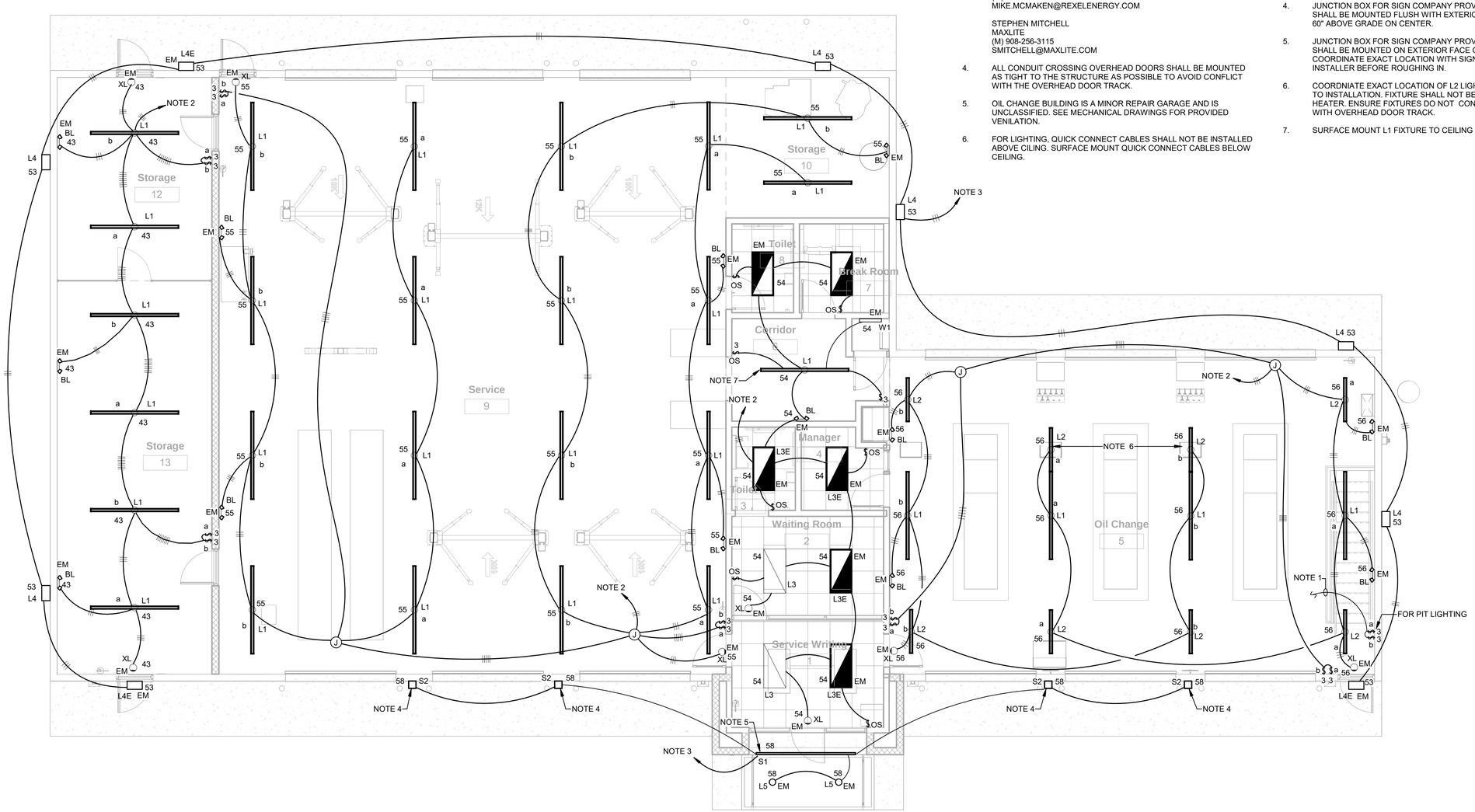

1 Main Level Plan - Lighting
3/16" = 1'-0"

PLAN NORTH

GENERAL NOTES:

1. CONNECT ALL "BL", "XL" AND EMERGENCY BATTERY PACKS IN FIXTURES MARKED "EM" TO UNSWITCHED HOT LEG OF CIRCUIT.
2. ENSURE LIGHTING FIXTURES L1 AND L2 DO NOT CONFLICT WITH OVERHEAD DOORS.
3. FOR THE LIGHTING PACKAGE PRICING CONTACT THE FOLLOWING:

   MIKE MCMAKEN
   REXEL ENERGY SOLUTIONS
   (M) 906 - 235 - 2979
   MIKE.MCMAKEN@REXELENERGY.COM

   STEPHEN MITCHELL
   MAXLITE
   (M) 908-256-3115
   SMITCHELL@MAXLITE.COM
4. ALL CONDUIT CROSSING OVERHEAD DOORS SHALL BE MOUNTED AS TIGHT TO THE STRUCTURE AS POSSIBLE TO AVOID CONFLICT WITH THE OVERHEAD DOOR TRACK.
5. OIL CHANGE BUILDING IS A MINOR REPAIR GARAGE AND IS UNCLASSIFIED. SEE MECHANICAL DRAWINGS FOR PROVIDED VENILATION.
6. FOR LIGHTING, QUICK CONNECT CABLES SHALL NOT BE INSTALLED ABOVE CILING. SURFACE MOUNT QUICK CONNECT CABLES BELOW CEILING.

NOTES:

1. CONNECT TO PIT LIGHTING. SEE SHEET E201 FOR CONTINUATION.
2. HOMERUN TO 20A, 1POLE CIRCUIT BREAKER IN PANELBOARD PP THROUGH LIGHTING CONTACTOR C-1. SEE DETAIL ON SHEET E102.
3. HOMERUN TO 20A, 1POLE CIRCUIT BREAKER IN PANELBOARD PP THROUGH LIGHTING CONTACTOR C-2. SEE DETAIL ON SHEET E102.
4. JUNCTION BOX FOR SIGN COMPANY PROVIDED FIXTURE SHALL BE MOUNTED FLUSH WITH EXTERIOR FACE OF WALL AT 60" ABOVE GRADE ON CENTER.
5. JUNCTION BOX FOR SIGN COMPANY PROVIDED FIXTURE SHALL BE MOUNTED ON EXTERIOR FACE OF WALL AT 17'AFF. COORDINATE EXACT LOCATION WITH SIGN LIGHTING INSTALLER BEFORE ROUGHING IN.
6. COORDNIATE EXACT LOCATION OF L2 LIGHT FIXTURES PRIOR TO INSTALLATION. FIXTURE SHALL NOT BE MOUNTED ABOVE HEATER. ENSURE FIXTURES DO NOT CONFLICT WITH OVERHEAD DOOR TRACK.
7. SURFACE MOUNT L1 FIXTURE TO CEILING IN THIS AREA.

GIDEON WAMAE, P.E.

4120 OVERLOOK CIRCLE, TRUSSVILLE, AL 35173
GWAMAE@GW-ENG.COM | 205.413.4112

AHO ARCHITECTS
a sole proprietorship
www.ahoarch.com

STATE OF KENTUCKY
GIDEON WAMAE
39747
LICENSED PROFESSIONAL ENGINEER
10/7/24

Express Oil Change & Tire Engineers

Single Building / Right Hand Oil Change / Front Enter / Side Tire Storage

Morehead, Kentucky

FINAL

No.	Description	Date

© 2024 Aho Architects, LLC.
All Rights Reserved.

Main Level Plan - Lighting

Project number	24029
Date	10/04/2024
Drawn by	TH
Checked by	GW

E200

Scale 3/16" = 1'-0"

10/7/2024 12:00:54 PM

GENERAL NOTES:

1. CONNECT ALL "BL", "XL" AND EMERGENCY BATTERY PACKS IN FIXTURES MARKED "EM" TO UNSWITCHED HOT LEG OF CIRCUIT.

2. FOR THE LIGHTING PACKAGE PRICING CONTACT THE FOLLOWING:

   MIKE MCMAKEN
   REXEL ENERGY SOLUTIONS
   (M) 906 - 235 - 2979
   MIKE.MCMAKEN@REXELENERGY.COM

   STEPHEN MITCHELL
   MAXLITE
   (M) 908-256-3115
   SMITCHELL@MAXLITE.COM

3. OIL CHANGE BUILDING IS A MINOR REPAIR GARAGE AND IS UNCLASSIFIED. SEE MECHANICAL DRAWINGS FOR PROVIDED VENILATION.

4. ADJUST LIGHT FIXTURES AS NEEDED TO AVOID CONFLICT WITH STRUCTURAL STEEL.

NOTES:

1. CONNECT TO LIGHT SWITCH ON FIRST FLOOR. SEE SHEET E200 FOR CONTINUATION.

2. HOMERUN TO 20A, 1POLE CIRCUIT BREAKER IN PANELBOARD PP THROUGH LIGHTING CONTACTOR C-1.

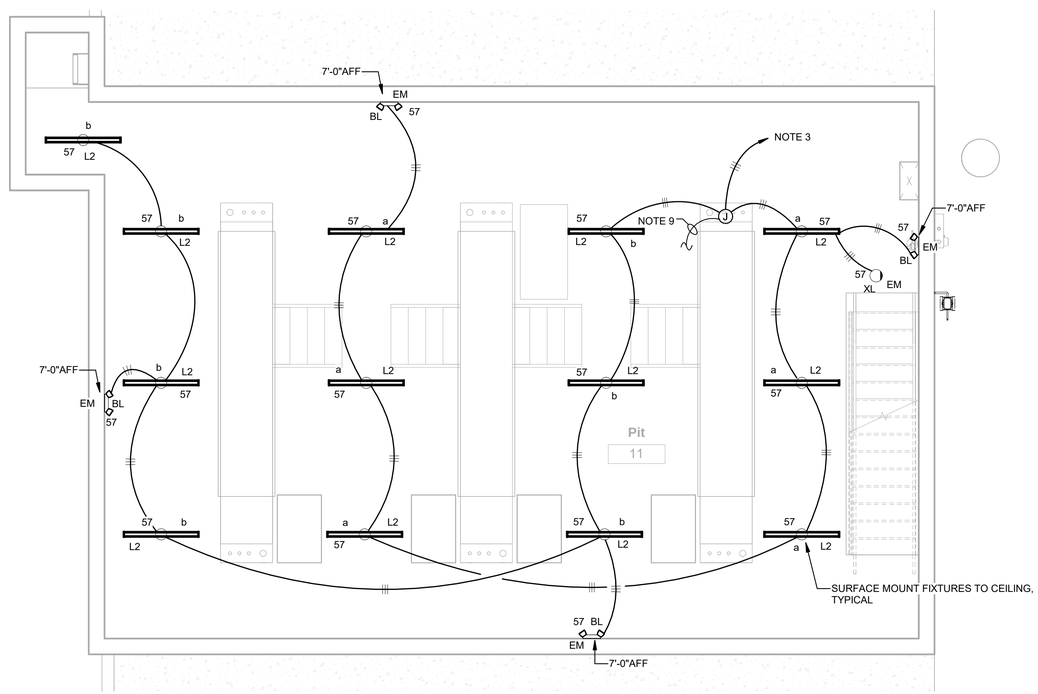

1 Pit Level Plan - Lighting
1/4" = 1'-0"

PLAN NORTH

GIDEON WAMAE, P.E.

4120 OVERLOOK CIRCLE, TRUSSVILLE, AL 35173
GWAMAE@GW-ENG.COM | 205.413.4112

AHO ARCHITECTS
a sole proprietorship
www.ahoarch.com

STATE OF KENTUCKY
GIDEON WAMAE
39747
LICENSED PROFESSIONAL ENGINEER
10/7/24

Express Oil Change & Tire Engineers

Single Building / Right Hand Oil Change / Front Enter / Side Tire Storage

Morehead, Kentucky

FINAL

No.	Description	Date

© 2024 Aho Architects, LLC.
All Rights Reserved.

Pit Level Plan - Lighting

Project number	24029
Date	10/04/2024
Drawn by	TH
Checked by	GW

E201

Scale	1/4" = 1'-0"

10/7/2024 12:01:01 PM

GENERAL NOTES:

1. CONTRACTOR SHALL VERIFY/COORDINATE LOCATION OF ALL POWER & DATA OUTLETS FOR EQUIPMENT. OBTAIN OWNER'S APPROVAL BEFORE ROUGH IN, NO EXCEPTIONS. NO ADDITIONAL COMPENSATION SHALL BE AWARDED FOR ANY ADDITIONAL WORK REQUIRED TO RELOCATE OUTLETS DUE TO CONTRACTOR'S FAILURE TO COORDINATE WITH OWNER.

2. ALL HORIZONTAL CONDUIT RUNS SHALL BE A MINIMUM OF 8' ABOVE FINISHED FLOOR EXCEPT FOR DROPS. ENSURE CONDUIT DOES NOT CONFLICT WITH OVERHEAD DOOR.

3. OIL CHANGE BUILDING IS A MINOR REPAIR GARAGE AND IS UNCLASSIFIED. SEE MECHANICAL DRAWINGS FOR PROVIDED VENILATION.

4. EXPRESS OIL CHANGE HAS OBTAINED EQUIPMENT AVALABILITY AND SPECIAL VOLUME PRICING ON POWER EQUIPMENT AND LIGHTING CONTROL PACKAGES FROM REXEL. SEE CONTACTS BELOW FOR PRICING AND INFORMATION:

   JEFFREY PARKER
   REXEL
   (M) 508-916-7758
   JEFFREY.PARKER@REXELUSA.COM

   COLIN BLACK
   REXEL
   COLIN.BLACK@REXELUSA.COM

   MIKE MCMAKEN
   REXEL ENERGY SOLUTIONS
   (M) 906-235-2979
   MIKE.MCMAKEN@REXELENERGY.COM

5. ALL CONDUIT CROSSING OVERHEAD DOORS SHALL BE MOUNTED AS TIGHT AS POSSIBLE TO THE STRUCTURE TO AVOID CONFLICT WITH THE OVERHEAD DOOR TRACK.

6. FINAL EQUIPMENT CONNECTIONS - CONTRACTOR IS RESPONSIBLE FOR PROVIDING ALL LABOR AND MATERIALS REQUIRED TO MAKE FINAL ELECTRICAL CONNECTIONS TO ALL EQUIPMENT FURNISHED BY THIS CONTRACTOR AND/OR FURNISHED BY OTHERS. VERIFY ALL ELECTRICAL REQUIREMENTS WITH EQUIPMENT SUPPLIER PRIOR TO ROUGH IN.

NOTES:

1. 3/4" CONDUIT STUBBED UP 18" INTO WORK PEDESTAL BASE POST. PROVIDE FLEXIBLE CONDUIT INTO WORK PEDESTAL CABINET. COORDINATE OUTLET REQUIREMENTS PRIOR TO ROUGH IN.

2. HOMERUN 3/4"EC TO TELEPHONE BACKBOARD.

3. LOCATIONS SHOWN HERE ARE APPROXIMATE. FIELD COORDINATE EXACT LOCATION OF CONSOLE & CONDUIT WITH OWNER & ALIGNMENT LIFT SHOP DRAWINGS BEFORE ROUGH-IN.

4. PROVIDE 1 1/2" EMPTY CONDUIT FROM CONSOLE, STUBBED 8" UP ON INSIDE FACE OF EXTERIOR WALL.

5. CONDUIT FOR WORK PEDESTALS IN OIL CHANGE AREA SHALL BE MOUNTED/ROUTED ON THE CEILING OF THE PIT IN LIEU OF IN THE SLAB.

6. ELECTRICAL CONTRACTOR SHALL FURNISH AND INSTALL ZOELLER - Z CONTROL APAK INDOOR ALARM WITH MECHANICAL FLOAT, MODEL # 10-4014. SEE MANUFACTURERS INSTALLATION INSTRUCTIONS PRIOR TO ROUGH IN. PROVIDE BATTERIES.

7. CONTRACTOR SHALL PROVIDE UNISTRUT SPANNING BETWEEN BAR JOISTS FOR MOUNTING OF CEILING RECEPTACLES.

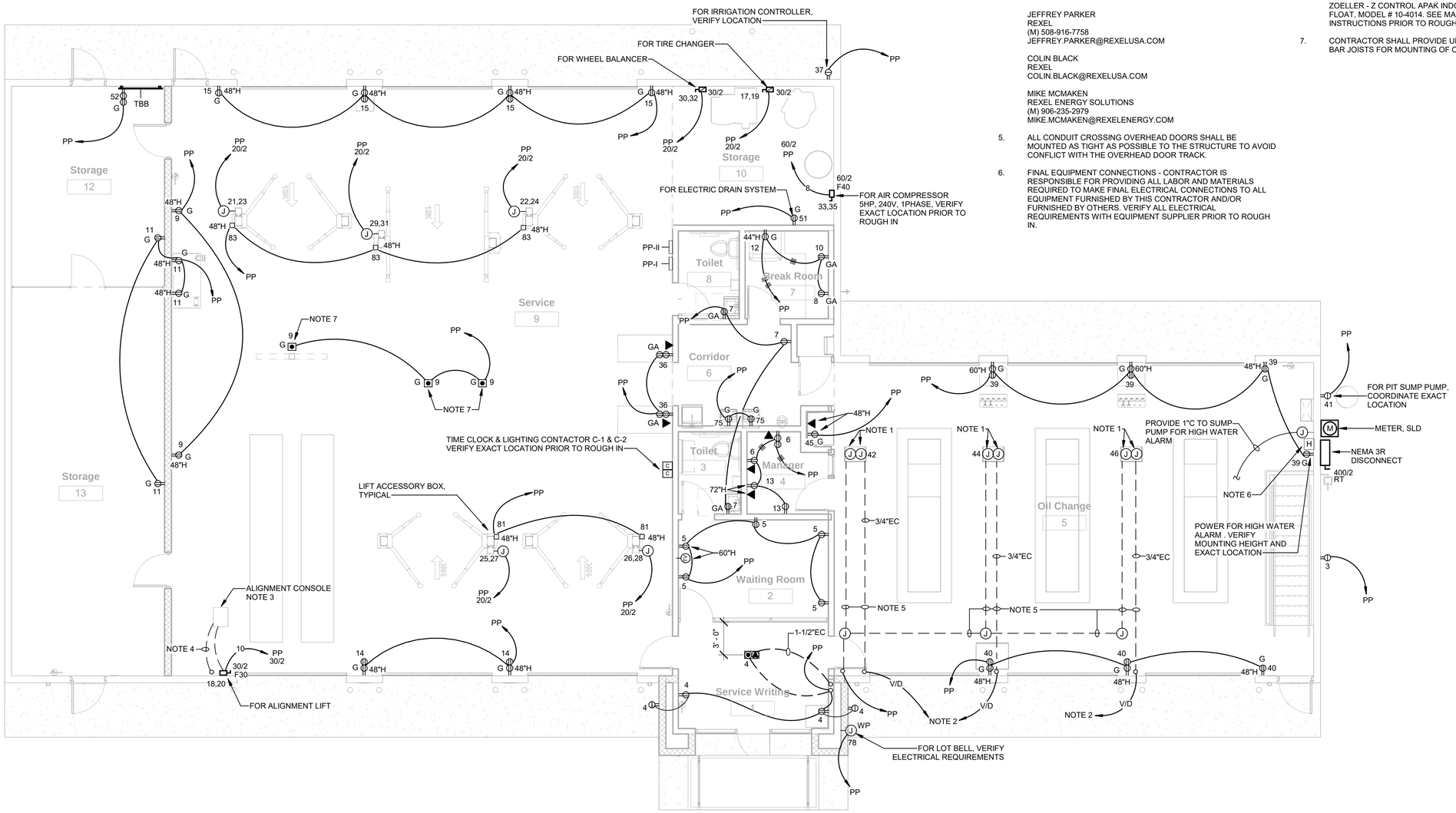

1 Main Level Plan - Power & Voice/Data
3/16" = 1'-0"

PLAN NORTH

GIDEON WAMAE, P.E.

4120 OVERLOOK CIRCLE, TRUSSVILLE, AL 35173
GWAMAE@GW-ENG.COM | 205.413.4112

AHO ARCHITECTS
a sole proprietorship
www.ahoarch.com

STATE OF KENTUCKY
GIDEON WAMAE
39747
LICENSED PROFESSIONAL ENGINEER
10/7/24

Express Oil Change & Tire Engineers

Single Building / Right Hand Oil Change / Front Enter / Side Tire Storage

Morehead, Kentucky

FINAL

No.	Description	Date

© 2024 Aho Architects, LLC.
All Rights Reserved.

Main Level Plan - Power & Voice/Data

Project number	24029
Date	10/04/2024
Drawn by	TH
Checked by	GW

E300

Scale 3/16" = 1'-0"

10/7/2024 12:03:37 PM

GENERAL NOTES:

1. OIL CHANGE BUILDING IS A MINOR REPAIR GARAGE AND IS UNCLASSIFIED. SEE MECHANICAL DRAWINGS FOR PROVIDED VENILATION.

4. EXPRESS OIL CHANGE HAS OBTAINED EQUIPMENT AVALABILITY AND SPECIAL VOLUME PRICING ON POWER EQUIPMENT AND LIGHTING CONTROL PACKAGES FROM REXEL. SEE CONTACTS BELOW FOR PRICING AND INFORMATION:

JEFFREY PARKER
REXEL
(M) 508-916-7758
JEFFREY.PARKER@REXELUSA.COM

COLIN BLACK
REXEL
COLIN.BLACK@REXELUSA.COM

MIKE MCMAKEN
REXEL ENERGY SOLUTIONS
(M) 906-235-2979
MIKE.MCMAKEN@REXELENERGY.COM

NOTES:

1. 2"EC HOMERUN TO TELEPHONE BACKBOARD ON EQUIPMENT PLATFORM.

2. MOUNT RECEPTACLES ONTO STRUCTURAL COLUMN.

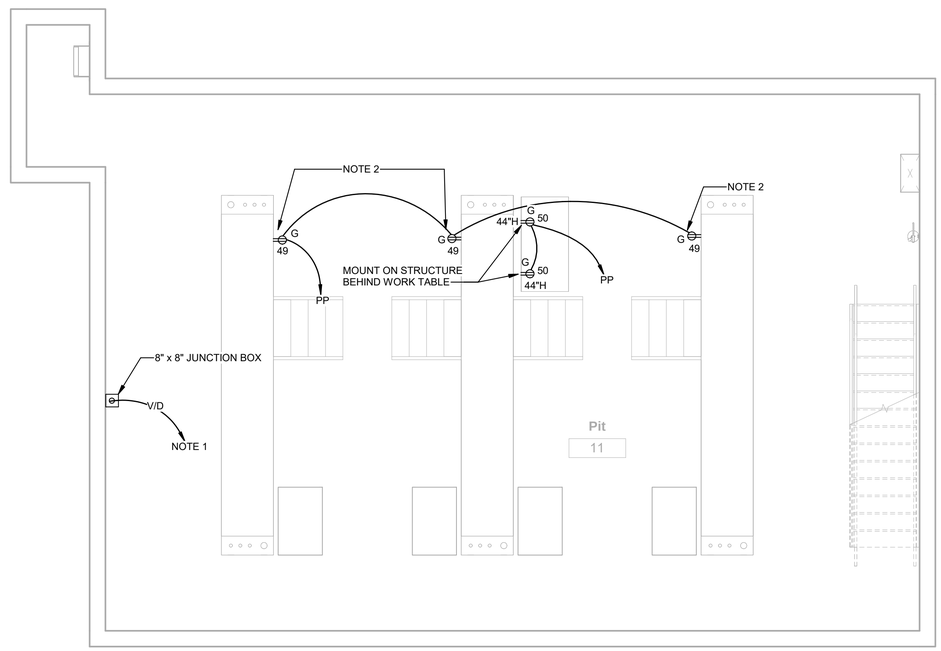

1 Pit Level Plan - Power & Voice/Data
1/4" = 1'-0"

PLAN
NORTH

GIDEON WAMAE, P.E.

4120 OVERLOOK CIRCLE, TRUSSVILLE, AL 35173
GWAMAE@GW-ENG.COM | 205.413.4112

AHO ARCHITECTS
a sole proprietorship
www.ahoarch.com

STATE OF KENTUCKY
GIDEON WAMAE
39747
LICENSED PROFESSIONAL ENGINEER
10/7/24

Express Oil Change & Tire Engineers

Single Building / Right Hand Oil Change / Front Enter / Side Tire Storage

Morehead, Kentucky

FINAL

No.	Description	Date

© 2024 Aho Architects, LLC.
All Rights Reserved.

Pit Level Plan - Power & Voice/Data

Project number	24029
Date	10/04/2024
Drawn by	TH
Checked by	GW

E301

Scale	1/4" = 1'-0"

10/7/2024 12:01:16 PM

GENERAL NOTES:

1. OIL CHANGE BUILDING IS A MINOR REPAIR GARAGE AND IS UNCLASSIFIED. SEE MECHANICAL DRAWINGS FOR PROVIDED VENILATION.

NOTES:

1. CONNECT TO 20A, 1POLE CIRCUIT BREAKER IN PANELBOARD PP THROUGH LIGHTING CONTACTOR C-1. SEE WIRING DIAGRAM ON SHEET E102 FOR MORE INFORMATION.

2. CONNECT TO LIGHTING CIRCUIT AND CONTROLS IN THIS AREA.

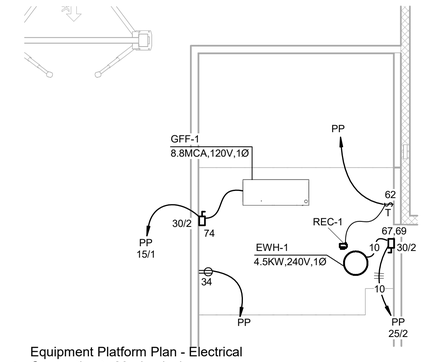

2 Equipment Platform Plan - Electrical Connection to Mechanical
3/16" = 1'-0"

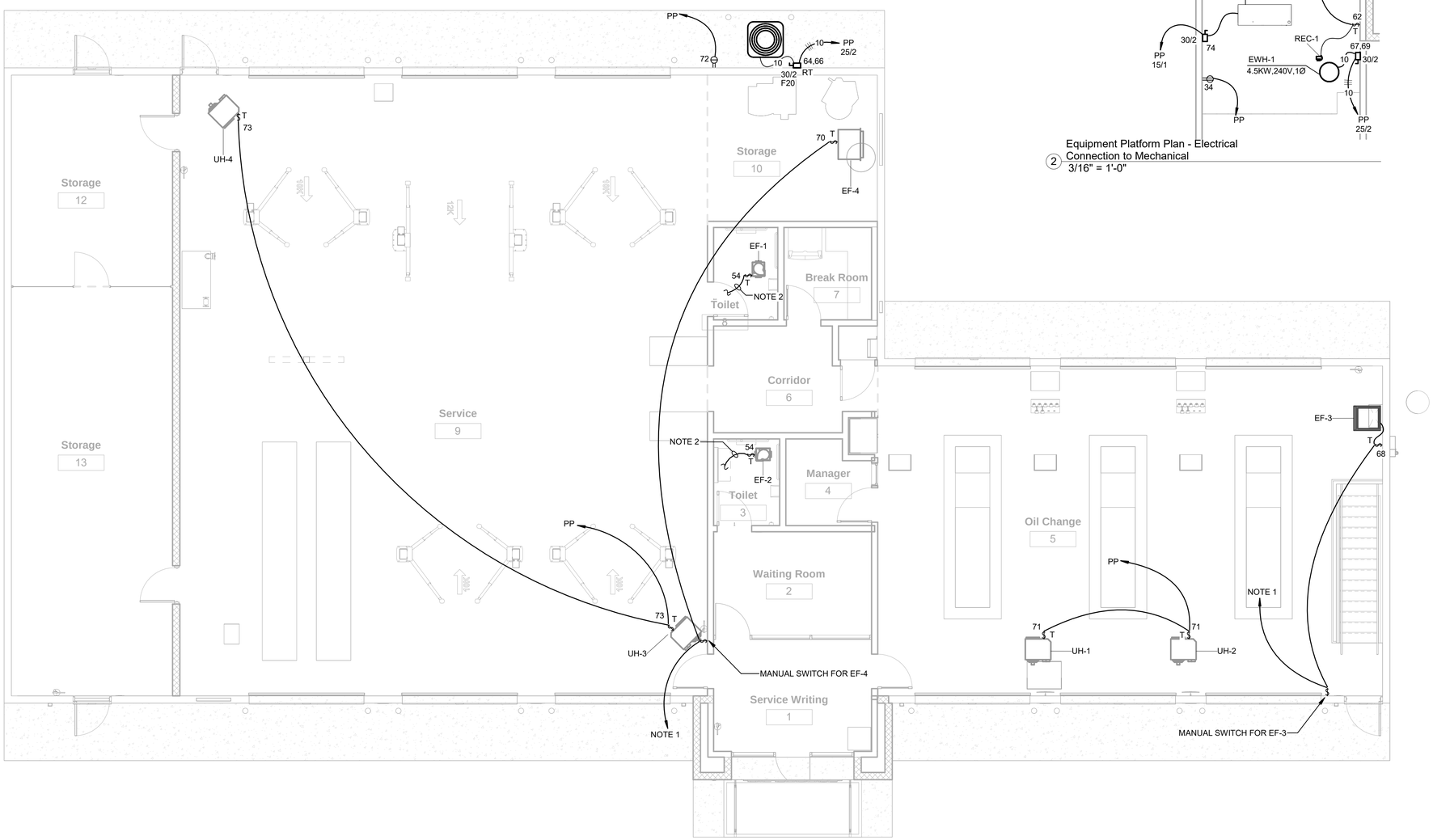

1 Main Level Plan - Electrical Connection to Mechanical
3/16" = 1'-0"

PLAN NORTH

GIDEON WAMAE, P.E.

4120 OVERLOOK CIRCLE, TRUSSVILLE, AL 35173
GWAMAE@GW-ENG.COM | 205.413.4112

AHO ARCHITECTS
a sole proprietorship
www.ahoarch.com

STATE OF KENTUCKY
GIDEON WAMAE
39747
LICENSED PROFESSIONAL ENGINEER
10/7/24

Express Oil Change & Tire Engineers

Single Building / Right Hand Oil Change / Front Enter / Side Tire Storage

Morehead, Kentucky

FINAL

No.	Description	Date

© 2024 Aho Architects, LLC.
All Rights Reserved.

Main Level Plan - Elec. Conn. to Mech.

Project number	24029
Date	10/04/2024
Drawn by	TH
Checked by	GW

E400

Scale	3/16" = 1'-0"

10/7/2024 12:01:23 PM

SECTION 16010 - ELECTRICAL SPECIFICATIONS

GENERAL REQUIREMENTS

A. Carefully examine General Conditions, other specification Sections, and other drawings (in addition to electrical), in order to be fully acquainted with their effect on electrical work.

B. Do all work in compliance with laws and ordinances and local authorities having jurisdiction and, where applicable, utility companies. Obtain and pay for any and all required permits, inspections, certificates of inspections and approval, and the like, and deliver such certificates to the Architect.

C. Cooperate with other trades and contractors at job. Perform work in such manner and at such times as not to delay work of other trades. Complete all work as soon as the condition of the structure and installation of equipment will permit. Patch, in a satisfactory manner and by the proper craft, any work damaged by electrical work.

D. All equipment (wiring devices, light fixtures, panelboards, disconnect switches, conductors, raceways, boxes, cabinets, circuit breakers, low voltage equipment, auxiliary systems, motors, machines, etc.) used for this project shall be tested by Underwriter's Laboratories, Inc and have "UL" nameplate.

E. Coordinate placement of equipment above ceiling to facilitate proper clearance for serving of equipments.

F. Take finish dimensions at the job site in preference to scale dimensions.

G. Obtain from manufacturer's data on all equipment, the dimensions of which may affect electrical work. Use this data to coordinate proper service characteristics, entry locations, etc., and to ensure minimum clearances are maintained.

H. The electrical contractor shall have had experience of at least the same size and scope as this project, on at least two other projects, within the last 5 years in order to be qualified to bid this project. This qualification shall also apply to his subcontractors.

I. Workmen shall be experienced in their respective trade. Workmanship of installed work shall be first class and will be so judged by the Architect/Engineer. Substandard work shall be removed and replaced.

J. The Bidders shall visit the site to thoroughly familiarize themselves with existing conditions prior to submitting their bid. No allowances will be made for lack of knowledge of existing conditions.

K. Provide one_Year warranty of conformance with drawings and specifications. In addition to the foregoing warranty, Contractor shall and does hereby warrant all materials and equipment furnished under this Division of the Specifications to be free from defects and to function or operate satisfactorily for one year after final acceptance of the work, and that any items not meeting this requirement will be made good by him without cost to owner, provided such defects or failures are not due to abuse, neglect, or lack of reasonable and ordinary maintenance.

L. Unless otherwise specified, provide only new, standard first grade materials throughout, conforming to standards established by Underwriter's Laboratories, Inc., and so marked and labeled, together with manufacturer's brand or trademark. All equipment subject to approval of Architect/Engineer before installation. All like items shall be of one manufacture.

M. Any equipment or materials shown on the drawings to be removed and reinstalled shall be cleaned and, if necessary repaired to like new condition prior to reinstallation.

N. Where shown on the drawings or specified herein, furnish and install electrical equipment. Furnish all materials, hardware, equipment, labor and services required for the installation of complete and properly working installations as shown on the drawings and described herein.

O. All work shall be executed in a workmanlike manner and shall present a neat and mechanical appearance upon completion. Care shall be exercised that all items are plumb, straight, level.

P. Equipment grounding conductors shall be bonded at each enclosure and pole base. All equipment grounding conductors shall be connected to a common bus, bonded to the equipment enclosure.

Q. An equipment grounding jumper shall be installed from the receptacle ground terminal to the outlet box.

CONDUITS

A. Conduit: Rigid and IMC shall be galvanized outside and inside by hot dipping. EMT shall be Electro_Galvanized. Conduit shall be as manufactured by Republic, Wheatland, Triangle, Pittsburgh Standard, Youngstown, or Allied.

B. Sealtight flexible metal conduit shall consist of flexible galvanized steel tubing with a liquidtight jacket of PVC. All flexible conduit shall have a copper bonding conductor wound into conduit body.

C. Couplings and connectors on rigid and IMC shall be standard threaded type, galvanized outside and inside by hot dipping. Clamp type and threadless are not acceptable. Couplings and connectors, for rigid and IMC shall be as manufactured by Raco or Appleton.

D. EMT connectors shall be steel, set screw unless required by code to be compression type, equipped with insulating throats. Connectors couplings shall be O-Z/Gedney 7000ST or 7000RST series, T & B 5123 - 5623 series, Midwest Electric series 1650, or equal series of Raco. Cast metal couplings will not be approved for any location.

E. EMT couplings shall be steel, set screw unless required by code to be compression type. Couplings shall be O-Z/Gedney 6000S or 6000RS series, T & B 5120 - 5620 series, Midwest Electric series 660, or equal series of Raco. Cast metal connectors will not be approved for any location.

F. Connectors raintight: Meyers or approved equal.

G. Bushings on rigid and IMC shall be threaded malleable iron with integral noncombustible insulator. Rigid and IMC bushings shall be O-Z/Gedney "IBC" series, T & B BIM series, Midwest Electric series 1031 - 1043 or equal by Penn Union. Grounding bushings shall be O-Z/Gedney "IBC-L" series, T & B 3870 - 3999 series, Midwest Electric GLL series or equal by Penn Union.

H. Watertight Flex Connectors: O-Z/Gedney, Raco, or Midwest Electric with insulating throat.

I. EMT conduit with set screw shall be used for all branch circuits, power feeders, auxiliary, signaling and controls circuits in none hazardous dry locations for 2" and smaller. EMT may be used exposed where not subject to physical damage. EMT with compression fitting may be used in damp locations up to the 2" limit. Otherwise use rigid or intermediate hot dipped galvanized inside and out steel, threaded for screwed fitting only conduits unless specified on the drawings otherwise.

J. Conduits shall be sized in accordance with the latest National Electrical Code except that conduits containing more than two conductors shall be sized based on 35% fill and 3/4" conduit shall contain no wire larger than #10 and no more than 6#12 or 4#10 wires. Conduit shall be sized larger than required above when so shown on the drawings or when required by local Code. Minimum size conduit shall be 3/4".

K. Where conduit enters boxes, they shall be secured in place with approved insulating fittings.

L. The use of running threads is absolutely prohibited. All conduit shall be jointed with approved conduit couplings. All couplings on IMC and rigid conduit shall be threaded.

M. All conduits shall be supported within 3 feet of each coupling, fitting, outlet box, junction box, cabinet or equipment enclosure Conduit supports shall be independent of ducts, plumbing piping, ceiling supports, etc. Conduits shall not be supported by junction boxes, pull boxes, fixtures, etc.

N. All exposed conduit threads, metal supports, etc., exposed to the elements or exterior of building shall be painted with rust preventive paint.

CONDUCTORS

A. Conductors for general use, sized #10 and smaller, shall be solid copper. Conductors #8 and larger, and any size to motors or vibrating equipment shall be stranded copper.

B. All conductor insulation shall be 600 volt THHN/THWN.

C. Wire connections, #10 and smaller connections shall be made with insulated wire connectors with steel spring connector threads. Wire connectors shall be "Twister" Wire-Nut series as manufactured by Ideal Industries, Inc. or approved equal.

D. On wire larger than #10, shall be made with approved solderless connectors and covered with Scotch #33 electrical tape so that the insulation is equal to conductor insulation.

E. Connection of stranded conductors, #8 and larger, to bus bars in switchboards, panelboards, equipment enclosures, junction boxes, etc. shall be made with individual lugs, size as required by conductor, bolted to bus bar with full size bolts and nuts with lock washers.

F. Conductors and conduits shall be continuous between outlets.

G. No conductor shall be pulled until conduit is cleaned of all foreign matter.

H. Where installed in panelboards, cabinets, wireways, switches and equipment wire and cable shall be neatly formed and tied.

I. Conductors sized #10 AWG and below shall have permanently colored insulation. Conductors sized #8 AWG and above shall be color coded by either permanently colored insulation or by means of colored tape applied to the conductor within 12" of each termination and in each enclosure, junction box, etc.

JUNCTION BOXES

A. Shall be standard type, with knockouts, made of hot dipped galvanized steel, Steel City, Raco, Appleton, or Bowers.

B. Ceiling outlet boxes shall be 4" octagon 1-1/2" deep or larger as required due to number of wires.

C. Boxes shall be provided with approved 3/8" fixture studs when required to support stem mounted light fixtures.

D. Except when located in exposed concrete block, switch and receptacle boxes shall be 4" square with trim ring for single gang installation. Appropriate gang boxes shall be used for mounting ganged switches.

E. When installed in exposed concrete block, switch and receptacle boxes shall be square type designed for exposed block installation.

F. Outlet boxes shall be securely fastened to structural members and shall not be supported by dry wall, gypsum board, plaster, etc. The device or plate installed in conjunction with the outlet box shall not be used for support. There shall be no more knockouts opened in any outlet box than are required. Boxes shall be sealed during construction.

G. Under no circumstances shall through-the-wall boxes be used. Back to back boxes shall be staggered at least 3 inches, except in fire rated partitions, in which case, back to back boxes shall be staggered at least 24 inches.

H. Outlet boxes two gangs and wider shall not be supported by attachment clips or any means which supports the boxes from less than two opposite sides of the box. Such outlet boxes in stud walls shall be supported securely by support members spanning between studs.

I. Outlet boxes installed in fire rated partitions shall be boxed in with wall board or other suitable fire rated material as required to maintain or restore the fire rating of the assembly.

WIRING DEVICES

A. Manufacturers' Names: Shortened versions (shown in parentheses) of the following manufacturers' names are used in other Part 2 articles:

1. Cooper Wiring Devices; a division of Cooper Industries, Inc. (Cooper).
2. Hubbell Incorporated; Wiring Device-Kellems (Hubbell).
3. Leviton Mfg. Company Inc. (Leviton).
4. Pass & Seymour/Legrand; Wiring Devices & Accessories (Pass & Seymour).

B. Convenience Receptacles, 125 V, 20 A: Comply with NEMA WD 1, NEMA WD 6 configuration 5-20R, and UL 498.

1. Products: Subject to compliance with requirements, provide one of the following:
   a. Cooper; 5351 (single), 5352 (duplex).
   b. Hubbell; HBL5351 (single), CR5352 (duplex).
   c. Leviton; 5891 (single), 5352 (duplex).
   d. Pass & Seymour; 5381 (single), 5352 (duplex).

C. Duplex GFCI Convenience Receptacles, 125 V, 20 A:

1. Products: Subject to compliance with requirements, provide one of the following:
   a. Cooper; GF20.
   b. Pass & Seymour; 2084.

A. Switches, 120/277 V, 20 A:

1. Products: Subject to compliance with requirements, provide one of the following:
   a. Cooper; 2221 (single pole), 2222 (two pole), 2223 (three way), 2224 (four way).
   b. Hubbell; CS1221 (single pole), CS1222 (two pole), CS1223 (three way), CS1224 (four way).
   c. Leviton; 1221-2 (single pole), 1222-2 (two pole), 1223-2 (three way), 1224-2 (four way).
   d. Pass & Seymour; 20AC1 (single pole), 20AC2 (two pole), 20AC3 (three way), 20AC4 (four way).

B. Single and combination plate types to match corresponding wiring devices.

1. Plate-Securing Screws: Metal with head color to match plate finish.
2. Material for Finished Spaces: stainless steel 302 **0.04-inch- (1-mm-)** thick.
3. Material for Unfinished Spaces: Galvanized steel.
4. Material for Damp Locations: Cast aluminum with spring-loaded lift cover, and listed and labeled for use in "wet locations."

F. Wet-Location, Weatherproof Cover Plates: NEMA 250, complying with type 3R weather-resistant, extra duty, die-cast aluminum with lockable in-use cover.

G. Color: Wiring device catalog numbers in Section Text do not designate device color.

1. Wiring Devices Connected to Normal Power System: Gray unless otherwise indicated or required by NFPA 70 or device listing.
2. Wiring Devices Connected to Emergency Power System: Red.

H. Comply with NECA 1, including the mounting heights listed in that standard, unless otherwise noted.

I. Coordination with Other Trades:

1. Take steps to insure that devices and their boxes are protected. Do not place wall finish materials over device boxes and do not cut holes for boxes with routers that are guided by riding against outside of the boxes.
2. Keep outlet boxes free of plaster, drywall joint compound, mortar, cement, concrete, dust, paint, and other material that may contaminate the raceway system, conductors, and cables.
3. Install device boxes in brick or block walls so that the cover plate does not cross a joint unless the joint is troweled flush with the face of the wall.
4. Install wiring devices after all wall preparation, including painting, is complete.

J. Conductors:

1. Do not strip insulation from conductors until just before they are spliced or terminated on devices.
2. Strip insulation evenly around the conductor using tools designed for the purpose. Avoid scoring or nicking of solid wire or cutting strands from stranded wire.
3. The length of free conductors at outlets for devices shall meet provisions of NFPA 70, Article 300, without pigtails.
4. Existing Conductors:
   a. Cut back and pigtail, or replace all damaged conductors.
   b. Straighten conductors that remain and remove corrosion and foreign matter.
   c. Pigtailing existing conductors is permitted provided the outlet box is large enough.

K. Device Installation:

1. Replace all devices that have been in temporary use during construction or that show signs that they were installed before building finishing operations were complete.
2. Keep each wiring device in its package or otherwise protected until it is time to connect conductors.
3. Do not remove surface protection, such as plastic film and smudge covers, until the last possible moment.
4. Connect devices to branch circuits using pigtails that are not less than 6 inches (152 mm) in length.
5. When there is a choice, use side wiring with binding-head screw terminals. Wrap solid conductor tightly clockwise, 2/3 to 3/4 of the way around terminal screw.
6. Use a torque screwdriver when a torque is recommended or required by the manufacturer.
7. When conductors larger than No. 12 AWG are installed on 15- or 20-A circuits, splice No. 12 AWG pigtails for device connections.
8. Tighten unused terminal screws on the device.
9. When mounting into metal boxes, remove the fiber or plastic washers used to hold device mounting screws in yokes, allowing metal-to-metal contact.

L. Receptacle Orientation:

10. Install ground pin of vertically mounted receptacles up, and on horizontally mounted receptacles to the right.
11. Install hospital-grade receptacles in patient-care areas with the ground pin or neutral blade at the top.

M. Device Plates: Do not use oversized or extra-deep plates. Repair wall finishes and remount outlet boxes when standard device plates do not fit flush or do not cover rough wall opening.

N. Dimmers:

1. Install dimmers within terms of their listing.
2. Verify that dimmers used for fan speed control are listed for that application.
3. Install unshared neutral conductors on line and load side of dimmers according to manufacturers' device listing conditions in the written instructions.

O. Arrangement of Devices: Unless otherwise indicated, mount flush, with long dimension vertical and with grounding terminal of receptacles on top. Group adjacent switches under single, multigang wall plates.

P. Adjust locations of floor service outlets and service poles to suit arrangement of partitions and furnishings.

PANELBOARDS

A. Product Data: For each type of panelboard, switching and overcurrent protective device, transient voltage suppression device, accessory, and component indicated. Include dimensions and manufacturers' technical data on features, performance, electrical characteristics, ratings, and finishes.

B. Source Limitations: Obtain panelboards, overcurrent protective devices, components, and accessories from single source from single manufacturer.

1. Comply with NEMA PB 1 including handling requirements.

D. Comply with NFPA 70.

E. Coordinate layout and installation of panelboards and components with other construction that penetrates walls or is supported by them, including electrical and other types of equipment, raceways, piping, encumbrances to workspace clearance requirements, and adjacent surfaces. Maintain required workspace clearances and required clearances for equipment access doors and panels.

F. Enclosures: Flush-and surface-mounted cabinets as shown on drawings.

1. Rated for environmental conditions at installed location.
   a. Outdoor Locations: NEMA 250, Type 4X (stainless steel).
   b. Indoor location NEMA 1 with hinged Front Cover: Entire front trim hinged to box and with standard door within hinged trim cover.
2. Finishes:
   a. Back Boxes: Stainless Steel.
3. Directory Card: Inside panelboard door, mounted in transparent card holder.

G. Phase, Neutral, and Ground Buses:

1. Material: Hard-drawn copper, 98 percent conductivity.
2. Equipment Ground Bus: Adequate for feeder and branch-circuit equipment grounding conductors; bonded to box.

H. Future Devices: Mounting brackets, bus connections, filler plates, and necessary appurtenances required for future installation of devices.

I. Panelboard Short-Circuit Current Rating: Fully rated to interrupt symmetrical short-circuit current available at terminals. See drawings for rating.

J. Manufacturers: Subject to compliance with requirements, provide products by either: Eaton, General Electric Company; Siemens, and Square D.

K. Branch Overcurrent Protective Devices for Circuit-Breaker Frame Sizes Larger Than 125 A: Bolt-on circuit breakers; plug-in circuit breakers where individual positive-locking device requires mechanical release for removal. Branch circuit breakers shall be HACR type. Molded-Case Circuit Breaker (MCCB): Comply with UL 489, with interrupting capacity to meet available fault currents.

L. Examine panelboards before installation. Reject panelboards that are damaged or rusted or have been subjected to water saturation.

M. Examine elements and surfaces to receive panelboards for compliance with installation tolerances and other conditions affecting performance of the Work.

N. Proceed with installation only after unsatisfactory conditions have been corrected.

O. Install panelboards and accessories according to NEMA PB 1.1.

P. Mount panelboard cabinet plumb and rigid without distortion of box. Mount recessed panelboards with fronts uniformly flush with wall finish and mating with back box.

Q. Install filler plates in unused spaces.

R. Arrange conductors in gutters into groups and bundle and wrap with wire ties after completing load balancing.

TEMPORARY POWER

A. The electrical contractor shall provide temporary electrical wiring for construction. The temporary service shall be single phase, three wire, 120/240 volts fused at main disconnect. All receptacles on this temporary service shall be protected by ground fault interruptible circuit breakers.

GIDEON WAMAE, P.E.

4120 OVERLOOK CIRCLE, TRUSSVILLE, AL 35173
GWAMAE@GW-ENG.COM | 205.413.4112

AHO ARCHITECTS
a sole proprietorship
www.ahoarch.com

STATE OF KENTUCKY
GIDEON WAMAE
39747
LICENSED PROFESSIONAL ENGINEER
10/04/24

Express Oil Change & Tire Engineers

Single Building / Right Hand Oil Change / Front Enter / Side Tire Storage

Morehead, Kentucky

FINAL

No.	Description	Date

© 2024 Aho Architects, LLC.
All Rights Reserved.

Specifications

Project number	24029
Date	10/04/2024
Drawn by	TH
Checked by	GW

E500

Scale NO SCALE

10/7/2024 11:32:23 AM

COM*check* Software Version 4.1.5.5

Interior Lighting Compliance Certificate

Project Information

Energy Code: 2012 IECC
Project Title: Express Oil Change & Tire Engineers
Project Type: New Construction

Construction Site:
Morehead, KY

Owner/Agent:
Express Oil Change
Birmingham, AL

Designer/Contractor:
Taylor Higginbotham
GW Engineering
Trussville, AL

Additional Efficiency Package(s)

Credits: 1.0 Required 1.0 Proposed
Reduced Lighting Power, 1.0 credit

Allowed Interior Lighting Power

A Area Category	B Floor Area (ft2)	C Allowed Watts / ft2	D Allowed Watts (B X C)
1-Automotive facility	6613	0.82	5423
		Total Allowed Watts =	5423

Proposed Interior Lighting Power

A Fixture ID : Description / Lamp / Wattage Per Lamp / Ballast	B Lamps/ Fixture	C # of Fixtures	D Fixture Watt.	E (C X D)
1-Automotive facility				
LED 1: L1: Other:	1	28	100	2800
LED 2: L2: Other:	1	21	50	1050
LED 3: L3L3E: Other:	1	9	36	324
LED 4: W1: Other:	1	1	30	30
			Total Proposed Watts =	4204

Interior Lighting PASSES: Design 22% better than code

Interior Lighting Compliance Statement

Compliance Statement: The proposed interior lighting design represented in this document is consistent with the building plans, specifications, and other calculations submitted with this permit application. The proposed interior lighting systems have been designed to meet the 2012 IECC requirements in COMcheck Version 4.1.5.5 and to comply with any applicable mandatory requirements listed in the Inspection Checklist.

Taylor Higginbotham — Name - Title
Taylor Higginbotham — Signature
10/04/2024 — Date

Project Title: Express Oil Change & Tire Engineers — Report date: 10/07/24
Data filename: C:\Users\Taylor Higginbotham\DC\ACCDocs\GW Engineering\2024 - AHO - EOC Mt. Sterling, KY\Project Files\DB - Lighting Calculations & Cutsheets\ComCheck - EOC Mt. Sterling, KY.cck — Page 1 of 7

COM*check* Software Version 4.1.5.5

Exterior Lighting Compliance Certificate

Project Information

Energy Code: 2012 IECC
Project Title: Express Oil Change & Tire Engineers
Project Type: New Construction
Exterior Lighting Zone: 2 (Neighborhood business district (LZ2))

Construction Site:
Morehead, KY

Owner/Agent:
Express Oil Change
Birmingham, AL

Designer/Contractor:
Taylor Higginbotham
GW Engineering
Trussville, AL

Allowed Exterior Lighting Power

A Area/Surface Category	B Quantity	C Allowed Watts / Unit	D Tradable Wattage	E Allowed Watts (B X C)
Main entry	3 ft of door	20	Yes	60
Illuminated area of facade wall or surface	1750 ft2	0.1	No	175
Other door (not main entry)	12 ft of door	20	Yes	240
			Total Tradable Watts (a) =	300
			Total Allowed Watts =	475
			Total Allowed Supplemental Watts (b) =	600

(a) Wattage tradeoffs are only allowed between tradable areas/surfaces.
(b) A supplemental allowance equal to 600 watts may be applied toward compliance of both non-tradable and tradable areas/surfaces.

Proposed Exterior Lighting Power

A Fixture ID : Description / Lamp / Wattage Per Lamp / Ballast	B Lamps/ Fixture	C # of Fixtures	D Fixture Watt.	E (C X D)
Main entry (3 ft of door width): Tradable Wattage				
LED 1: L5: Other:	1	2	25	50
Illuminated area of facade wall or surface (1750 ft2): Non-tradable Wattage				
LED 2: L4: Other:	1	6	38	228
Other door (not main entry) (12 ft of door width): Tradable Wattage				
LED 3: L4E: Other:	1	3	38	114
			Total Tradable Proposed Watts =	164

Exterior Lighting PASSES: Design 81% better than code

Exterior Lighting Compliance Statement

Compliance Statement: The proposed exterior lighting design represented in this document is consistent with the building plans, specifications, and other calculations submitted with this permit application. The proposed exterior lighting systems have been designed to meet the 2012 IECC requirements in COMcheck Version 4.1.5.5 and to comply with any applicable mandatory requirements listed in the Inspection Checklist.

Taylor Higginbotham — Name - Title
Taylor Higginbotham — Signature
10/04/2024 — Date

Project Title: Express Oil Change & Tire Engineers — Report date: 10/07/24
Data filename: C:\Users\Taylor Higginbotham\DC\ACCDocs\GW Engineering\2024 - AHO - EOC Mt. Sterling, KY\Project Files\DB - Lighting Calculations & Cutsheets\ComCheck - EOC Mt. Sterling, KY.cck — Page 2 of 7

AHO ARCHITECTS
a sole proprietorship
www.ahoarch.com

STATE OF KENTUCKY
GIDEON WAMAE
39747
LICENSED PROFESSIONAL ENGINEER
10/4/24

Express Oil Change & Tire Engineers

Single Building / Right Hand Oil Change / Front Enter / Side Tire Storage

Morehead, Kentucky

FINAL

No.	Description	Date

(C) 2024 Aho Architects, LLC.
All Rights Reserved.

COMcheck

Project number	24029
Date	10/04/2024
Drawn by	TH
Checked by	GW

E600

Scale NO SCALE

GIDEON WAMAE, P.E.

4120 OVERLOOK CIRCLE, TRUSSVILLE, AL 35173
GWAMAE@GW-ENG.COM | 205.413.4112

10/7/2024 11:32:23 AM